High Flux Isotope Reactor (HFIR)

USER GUIDE

A guide to in-vessel irradiations and experiments

NSUF Revision 1.0
ORNL
May 2011

OAK RIDGE National Laboratory

ORNL is managed by UT-Battelle, LLC, under contract
DE-AC05-00OR22725 for the U.S. Department of Energy, Office of Science

U.S. DEPARTMENT OF
ENERGY

Contents

1 Introduction 1
2 HFIR History 2
3 Reactor Overview 3
4 Reactor Core Assembly 5
5 Neutron Fluxes and Gamma Heating Rates 8
6 Experiment Locations in the HFIR Core 10
6.1 Flux Trap (Target Region) 12
6.2 Peripheral Target Positions 13
6.3 Hydraulic Tube Facility 14
6.4 Large Removable Beryllium Facilities 15
6.5 Small Removable Beryllium Facilities 15
6.6 Small Vertical Experiment Facilities 17
6.7 Large Vertical Experiment Facilities 17
6.8 Slant Engineering Facilities 17
7 Neutron Activation Analysis (NAA) 18
7.1 What is NAA used for? 18
7.2 What Elements can we Measure? 18
7.3 The NAA Facility 19
8 How to Work with ORNL and HFIR 20
8.1 Establishing a Relationship with User Facilities 20
8.2 Working with HFIR through a Partnership 20
8.3 Working with the ORNL Isotopes Business Office 20
8.4 Basic Policies 21
8.5 The Overall Process 21
8.6 The Screening Process 22
8.6.1 Submitting a Proposal 22
8.6.2 Proposal Review and Screening 22
8.7 Preparing for the Irradiation 23
9 Experiment Design Requirements 24
9.1 Quality Assurance Requirements 24
9.2 Approved Rabbit Housings Designs 24
9.2.1 Standard Finned Rabbit 24
9.2.2 Increased Bore Finned Rabbit 25
9.2.3 Reduced Bore Finned Rabbit 25
9.2.4 Un-finned Rabbit 25
9.2.5 Un-finned Selenium Rabbit 26
9.2.6 Perforated Rabbit 26
9.3 Rabbit Housing Design Requirements (for various experiment positions) 27
9.4 Requirements Imposed on Sample Materials Enclosed in the Rabbits 30
9.5 Constraints Imposed on Sample Material Loading Configuration Within the Rabbit 31
10 References 32
11 Attachments 33

List of Figures

Figure 1: Aerial View of the HFIR and REDC Facilities 1
Figure 2: Timeline of HFIR 2
Figure 3: Overview of the HFIR Layout 3
Figure 4: Vertical Cross Section through HFIR 4
Figure 5:Basic HFIR Core Construction 5
Figure 6: HFIR Fuel Design 5
Figure 7: Top View of a HFIR Fuel Bundle 6
Figure 8: HFIR Control Room 6
Figure 9: Neutron Flux in HFIR Operating at 85MW 9
Figure 10: Experiment Positions at HFIR 10
Figure 11: Photo of the HFIR Core 11
Figure 12: Target Region Experiment and Isotope Production Positions 12
Figure 13: Example PTP Target 13
Figure 14: Cut-away view of Target Basket 13
Figure 15: Typical finned rabbit design 14
Figure 16: Typical Hydraulic Tube Rabbit 15
Figure 17: Removable Beryllium Experiment Positions 16
Figure 18: Elements detectible by NAA 18
Figure 19: Flight Tube PT-1 from the NAA Lab to the Reactor 19

List of Tables

Table 1: Gamma Heating Rates at Various Positions in the Flux Trap (@85MW) 9
Table 2: Approved Materials for use in the Non-Finned Rabbit or Increased Bore Rabbit 33
Table 3: Approved Materials for use in the Perforated Rabbit Housing 34
Table 4: Approved Materials for use in the Non-Finned Selenium Rabbit Housing 35
Table 5:Approved Materials for use in the Reduced Bore Finned Rabbit Housing 35
Table 6:Approved Materials for use in the Std. Finned Rabbits or Reduced Bore Finned Rabbit .. 36

1 Introduction

Operating at 85 MW, HFIR is the highest flux reactor-based source of neutrons for condensed matter research in the United States, and it provides one of the highest steady-state neutron fluxes of any research reactor in the world. The thermal and cold neutrons produced by HFIR are used to study physics, chemistry, materials, engineering, and biology. The intense neutron flux, constant power density, and consistent operating cycles are used by more than 600 researchers each year for neutron scattering research of the fundamental properties of condensed matter.

Figure 1: Aerial View of the HFIR and REDC Facilities

HFIR offers three unique facilities for research proposed through the National Scientific User Facility (NSUF). These include

- In-core irradiations for medical, industrial, and isotope production and research on severe neutron damage to materials
- Neutron Activation Analysis (NAA) to examine trace elements and identify the composition of materials.
- Gamma irradiation capability that uses spent fuel assemblies and is capable of accommodating high gamma dose experiments.

This user guide covers the In-Vessel irradiation facilities. Please refer to the facility-specific user guide for the other facilities.

HFIR is currently scheduled to provide 161 days of 100%-power, steady-state neutrons per year, providing in-core irradiation capabilities for materials research and isotope production.

Additionally, HFIR offers 4 beam lines with 9 world-class instruments for condensed matter research, and 3 additional instruments are expected to be commissioned in 2011. To use the neutron scattering capabilities of HFIR, please contact the Neutron Scattering Sciences User Group at neutrons.ornl.gov.

2 HFIR History

In January 1958, the U.S. Atomic Energy Commission (AEC) reviewed the status of transuranium isotope production in the United States, and by November of the same year, the commission decided to build the High Flux Isotope Reactor (HFIR) at Oak Ridge National Laboratory, with a fundamental focus on isotope research and production. Since it first went critical in 1965, the in-core uses for HFIR have broadened to include materials, fuels, and fusion energy research, in addition to isotope production and research for medical, nuclear, detector and safety purposes.

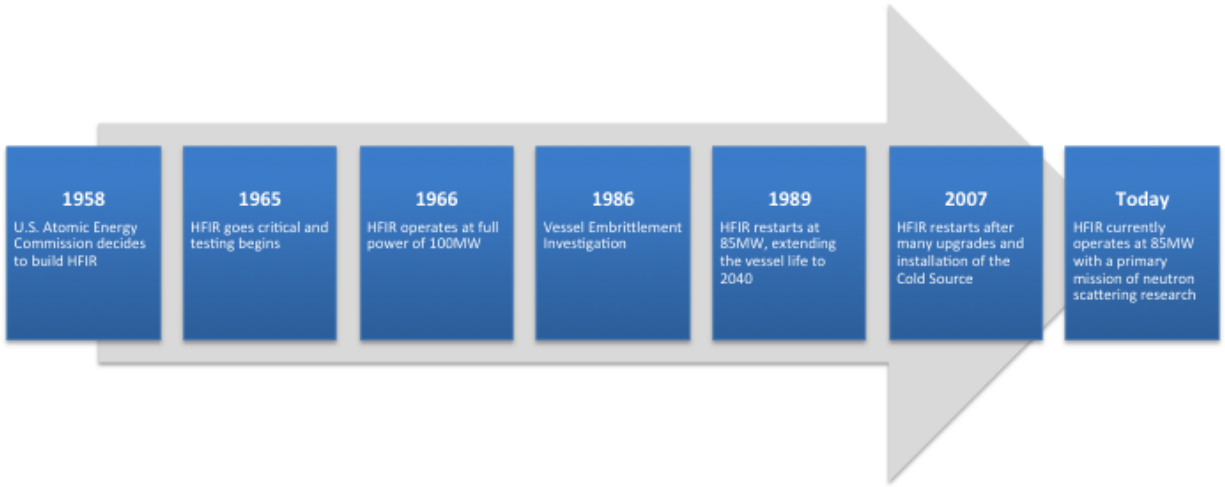

Figure 2: Timeline of HFIR

From the time it attained its design power of 100 MW in September 1966, a little over five years from the beginning of its construction, until it was temporarily shut down in late 1986, HFIR achieved a record of operating time unsurpassed by any other reactor in the United States. By December 1973, it had completed its 100th fuel cycle, each lasting approximately 23 days.

In November 1986, tests on irradiation surveillance specimens indicated that neutron irradiation was embrittling the reactor vessel at a faster rate than originally predicted. HFIR was shut down to allow for extensive reviews and evaluation of the facility. Two years and five months later, the reactor was restarted at 85 MW following a thorough reevaluation and modifications to extend the life of the plant while protecting the integrity of the pressure vessel. Coincident with physical improvements were renewed training, safety analysis, and quality assurance activities. Primary coolant pressure and core power were reduced to preserve vessel integrity while maintaining thermal margins, and long-term commitments were made for continued technological and procedural upgrades.

Though neutron scattering research has become HFIR's main mission, it retains one of its original primary purposes: the production of californium-252 and other transuranium isotopes for research, industrial, and medical applications. To this day, HFIR is the western world's sole supplier of californium-252, an isotope with uses ranging from cancer therapy to the detection of pollutants in the environment. HFIR also provides for a variety of irradiation tests and experiments made possible by the facility's exceptionally high neutron flux.

3 Reactor Overview

HFIR is a beryllium-reflected, light water-cooled and moderated, flux-trap type reactor that uses highly enriched uranium-235 as the fuel. Operating at 85 MW, HFIR produces an average thermal neutron flux of 2.3 X 10^{15} n/cm^2-seconds. The image below is a cutaway of the reactor which shows the pressure vessel, its location in the reactor pool, and some of the experiment facilities.

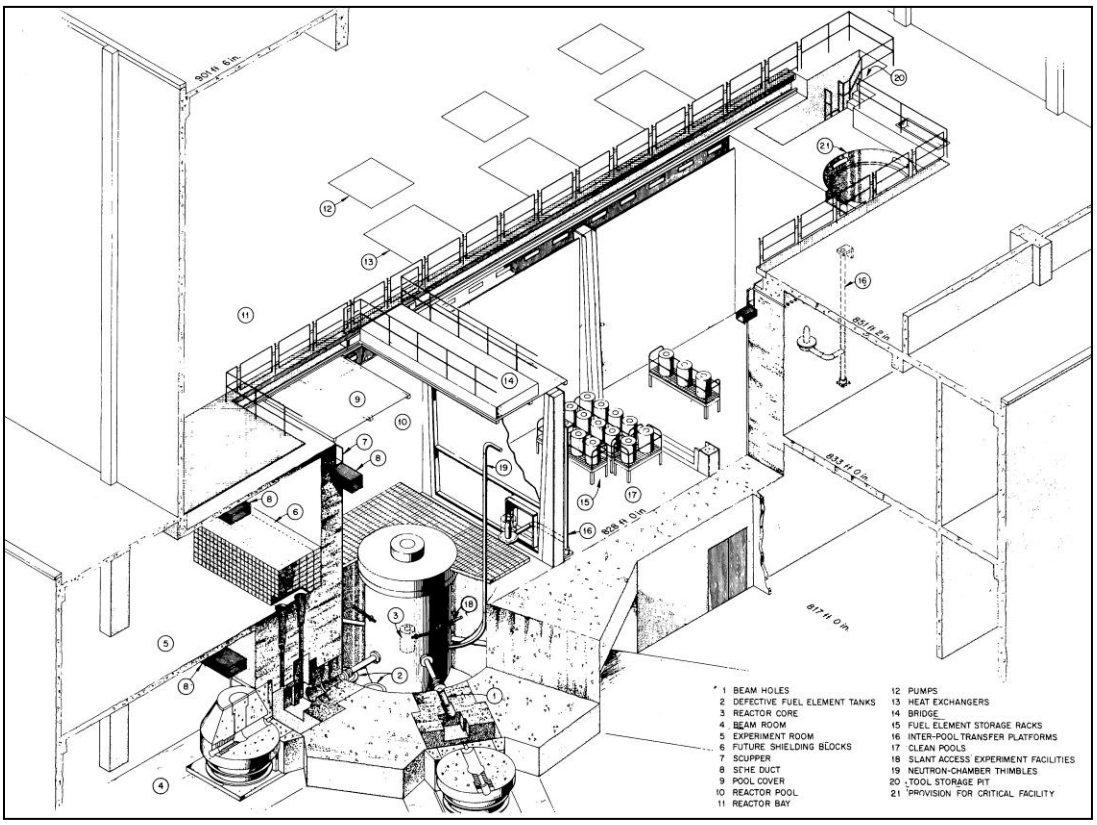

Figure 3: Overview of the HFIR Layout

A "flux trap" type reactor core consists of an annular region of fuel surrounding an unfueled moderating region or "island" (see Section 4. Reactor Core Assembly). This configuration permits fast neutrons emanating from the fuel to be moderated in the island and thus produces a region of very high thermal-neutron flux at the center of the island. This reservoir of thermalized neutrons is "trapped" within the reactor, making it available for isotope production. Additionally, the edges of this flux trap will experience high fast neutron flux since they are physical very close to the neutrons emanating from the fuel. The large flux of neutrons in the reflector outside the fuel is accessed by empty "beam" tubes extending from the sides of the reflector, which allow neutrons to be beamed into experiments outside the reactor shielding. Finally, a variety of holes through the top of the pressure vessel provide more facilities for materials irradiation.

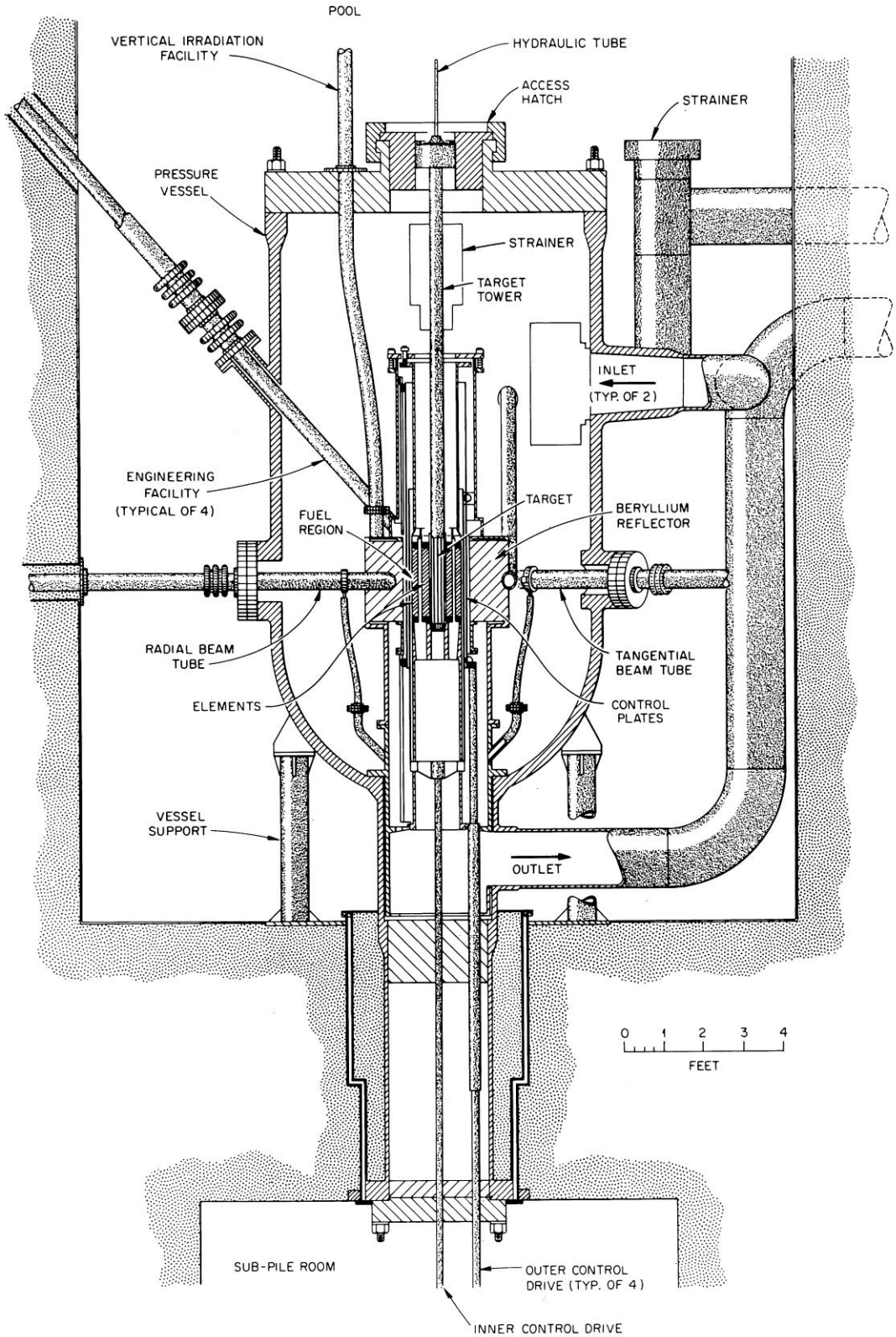

Figure 4: Vertical Cross Section through HFIR

4 Reactor Core Assembly

The reactor core assembly is contained in an 8-ft (2.44-m)-diameter pressure vessel located in a pool of water. The top of the pressure vessel is 17 ft (5.18 m) below the pool surface, and the reactor horizontal mid-plane is 27.5 ft (8.38 m) below the pool surface. The control plate drive mechanisms are located in a sub-pile room beneath the pressure vessel. These features provide the necessary shielding for working above the reactor core and greatly facilitate access to the pressure vessel, core, and reflector regions.

The reactor core is cylindrical, just over 2 ft (0.76 m) high and 17 (43.18 cm) inches in diameter. A 5-in. (12.70-cm)-diameter hole, referred to as the "flux trap," forms the center of the core. The target positions typically contain transplutonium isotopes, including curium-244 among others and are positioned on the reactor vertical axis within the flux trap. The fuel region is comprised of two concentric fuel elements. The inner element contains 171 fuel plates, and the outer element contains 369 fuel plates. The fuel plates are curved in the shape of an involute, thus providing a constant coolant channel width between each curved plate. The fuel (U3O8-Al cermet) is non-uniformly distributed along the arc of the involute to minimize the radial peak-to-average power density ratio. A burnable poison (boron-10) is included in the inner fuel element primarily to flatten the radial flux peak providing a longer cycle for each fuel element. The average core lifetime with typical experiment loading is approximately 23 days at 85 MW.

The fuel region is surrounded by a concentric ring of beryllium reflector approximately 1 ft (30 cm) thick. This in turn is subdivided into three regions: the removable reflector, the semi-permanent reflector, and the permanent reflector. The beryllium is surrounded by a water reflector of effectively infinite thickness. In the axial direction, the reactor is reflected by water.

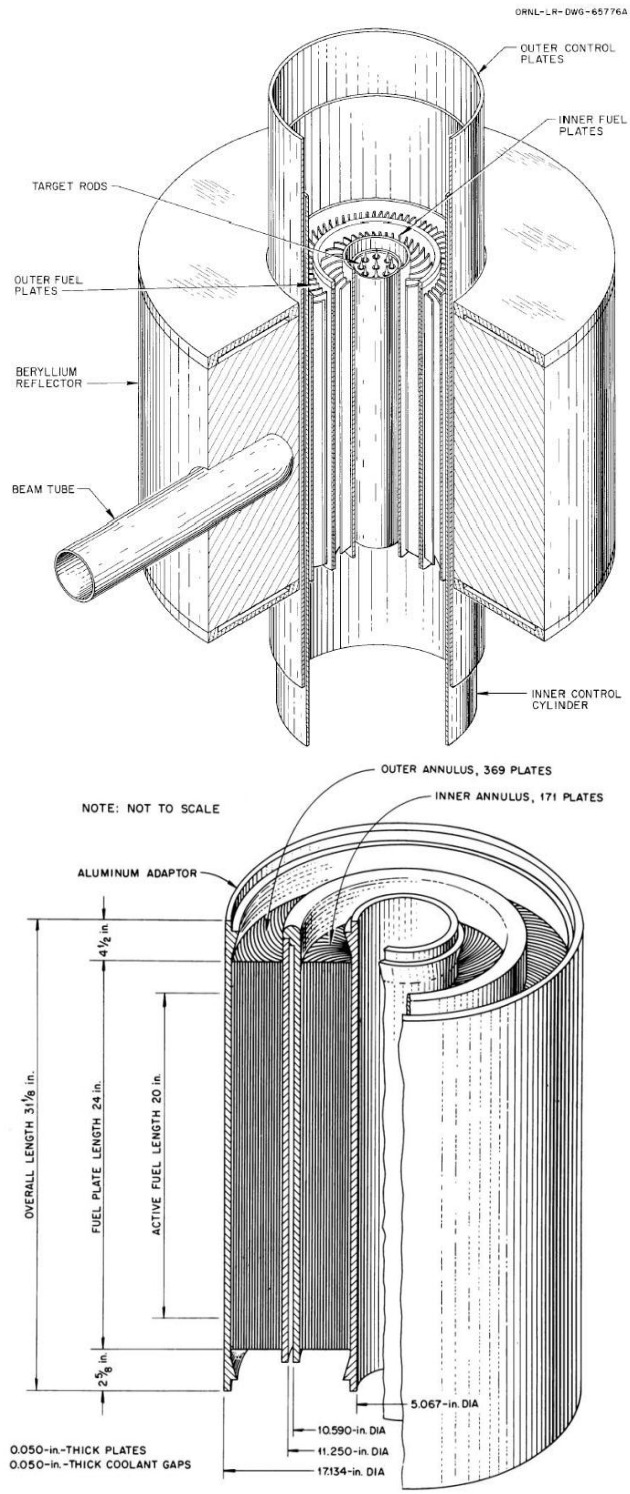

Figure 6: HFIR Fuel Design

The control plates, in the form of two thin, poison-bearing concentric cylinders, are located in an annular region between the outer fuel element and the beryllium reflector. These plates are driven in opposite directions to open and close a window at the core mid-plane. Reactivity is increased by downward motion of the inner cylinder and the upward motion of the four outer quadrant plates. The inner cylinder is used for shimming and power regulation and has no fast safety function. The outer control cylinder consists of four separate quadrant plates, each having an independent drive and safety release mechanism. All control plates have three axial regions of different neutron poison content designed to minimize the axial peak-to-average power-density ratio throughout the core lifetime. Any single quadrant plate or cylinder is capable of shutting the reactor down.

Figure 7: Top View of a HFIR Fuel Bundle

The reactor instrumentation and control system design reflects the emphasis placed on the importance of continuity of operation while maintaining safe operation. Three independent safety channels are arranged in a coincidence system that requires agreement of two of the three for safety shutdowns. This feature is complemented by an extensive "on-line" testing system that permits the safety function of any one channel to be tested at any time during operation. Additionally, three independent automatic control channels are arrayed so that failure of a single channel will not significantly disturb operation. All of these factors contribute to the continuity of operation of the HFIR.

Figure 8: HFIR Control Room

The cooling system consists of a primary and a secondary system. The primary coolant enters the pressure vessel through two 16-in. (40.64-cm)-diameter pipes above the core, passes through the core, and exits through a single 18-in. (45.72-cm)-diameter pipe beneath the core. The flow rate is approximately 16,000 gpm (1.01 m^3/s), of which approximately 13,000 gpm (0.82 m^3/s) flows through the fuel region. The remainder flows through the target, reflector, and control regions. The system is designed to operate at a nominal inlet pressure of 468 psig (3.33 x 106 Pa). Under these conditions the inlet coolant temperature is 120°F (49°C), the corresponding exit temperature is 156°F (69°C), and the pressure drop through the core is about 110 psi (7.58 × 105 Pa).

From the reactor, the coolant flow is distributed to three of four identical heat exchanger and circulation pump combinations, each located in a separate cell adjacent to the reactor and storage pools. Each cell also contains a letdown valve that controls the primary coolant pressure. A secondary coolant system removes heat from the primary system and transfers it to the atmosphere by passing water over a four-cell induced-draft cooling tower.

A fuel cycle for the HFIR normally consists of full-power operation at 85 MW for a period of 22 to 26 days (depending on the experiment and radioisotope load in the reactor), followed by an end-of-cycle outage for refueling, maintenance and upgrades. End-of-cycle refueling outages vary as required to allow for control plate replacement, calibrations, maintenance, and inspections, but an operational schedule can be found at neutrons.ornl.gov. Experiment insertion and removal may be accomplished during any end-of-cycle outage. Interruption of a fuel cycle for experiment installation or removal is not permitted to avoid impact on neutron scattering research. Deviations from the schedule are infrequent.

5 Neutron Fluxes and Gamma Heating Rates

This section provides an overview of neutron flux and gamma heating rate information for prospective HFIR users. For more information, please see *Reference 1*, which provides detailed axial distributions for both thermal-neutron and fast-neutron fluxes in the various experiment facilities, one-dimensional 33-group fluxes throughout the reactor, and detailed epithermal flux information. The neutron flux values herein represent unperturbed values and were obtained from one-dimensional 33-group diffusion theory calculations supplemented by a limited number of two-dimensional few group diffusion theory calculations. The calculated unperturbed fluxes are believed to be accurate to within less than +15% of the actual values in regions away from the control rods. The accuracy of calculated values near the control region is more uncertain. This applies especially to thermal-neutron fluxes at the start of the fuel cycle when the control plates are partially inserted.

Prospective users of experiment facilities located near the control region should give appropriate consideration to the accurate assessment of neutron fluxes if accuracy is a program requirement. Also, experiments can be significant neutron flux perturbers, and therefore experiments in one facility can perturb the fluxes in closely adjacent facilities. Assistance with these considerations is available to experimenters.

With regard to gamma-heating rates, the values provided here were obtained from calculations and may differ from the actual values which exist in the reactor. Specifically, the calculated values are believed to be conservative (i.e., higher than actual values), based on comparison with a limited number of measurements in the flux trap region. Therefore, if safety considerations are paramount, the calculated values given here should be used. Conversely, if the nature of the experiment requires an accurate knowledge of the gamma-heating rates to calculate the temperature of the material being irradiated, then measured values for the particular locations should be obtained and used. Assistance in this area is available. These gamma-heating rates are in units of watts/g of aluminum. The results of limited measurements of gamma-heating rates in different materials, performed in the center of· the flux trap, are given at the end of this section. In the absence of other information, these values can serve as a basis for estimating gamma-heating rates in materials other than aluminum applicable to any experiment facility in the reactor.

Additionally, Monte Carlo N-Particle Transport Codes can be used to simulate specific conditions and material experiments in HFIR. Please visit http://neutrons.ornl.gov/facilities/HFIR/ to download the most current simulation MCNP data.

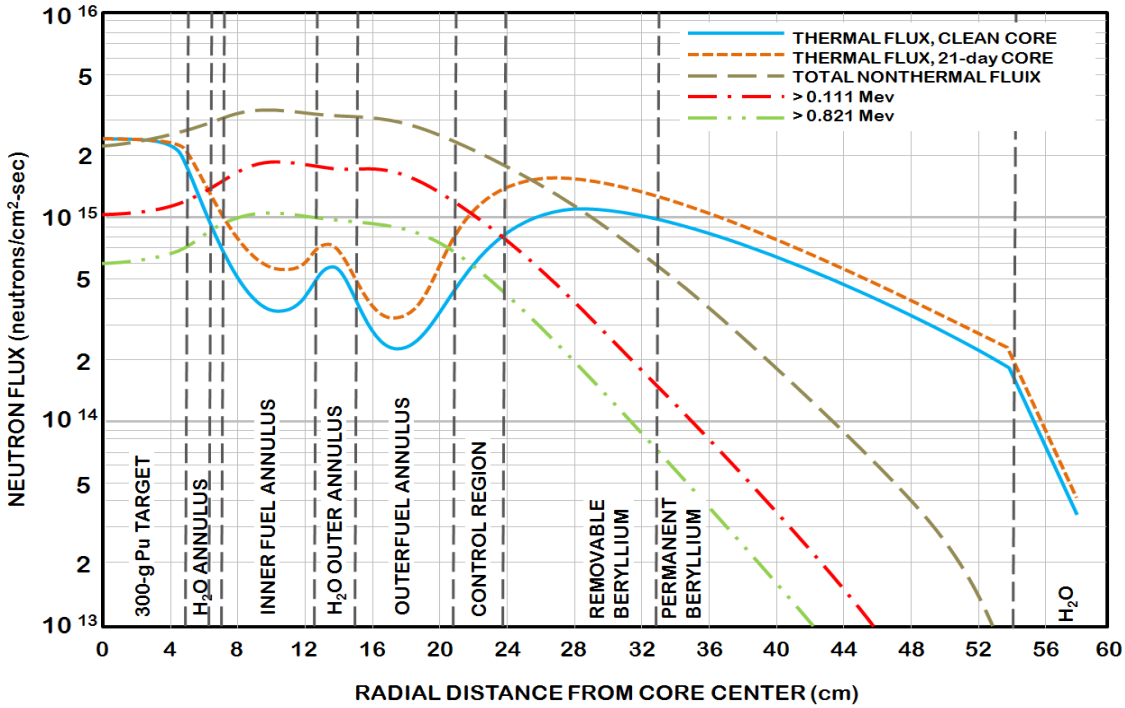

Figure 9: Neutron Flux in HFIR Operating at 85MW

Table 1: Gamma Heating Rates at Various Positions in the Flux Trap (@85MW)

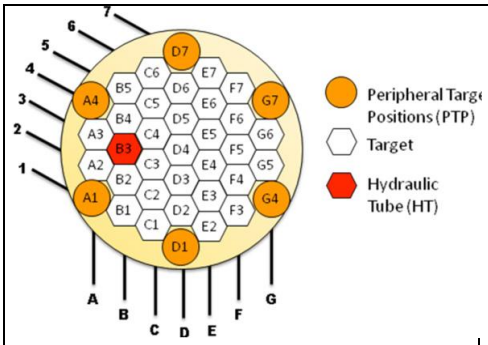

	Radial Distance from Reactor Vertical Centerline	Gamma Heating Rate in Aluminum (watts/g) Elevation Above Reactor Midplane (cm)					
	(cm)	0.00	5.08	10.16	15.24	20.32	25.40
C3, C4, D3, D5, E4, E5	1.689	37.7	34.3	31.7	28.2	23.5	17.0
B3, C2, C5, E5, E6, F5	2.926	38.8	34.7	31.8	28.3	23.5	17.0
B2, B4, D2, D6, F4, F6	3.378	39.3	35.0	32.0	28.4	23.6	17.0
A2, A3, B1, B5, C1, C6, E2, E7, F7, G5, G6	4.465	39.6	35.6	32.5	28.8	24.1	17.0
A1, A4, D1, D7, G4, G7	5.067	40.9	36.0	32.6	29.0	24.1	17.0

6 Experiment Locations in the HFIR Core

The original mission of HFIR was the production of transplutonium isotopes. Additionally, the original designers included many other experiment facilities. The following sections describe each facility in enough detail to provide guidance for researchers. For additional information and contact information please visit neutrons.ornl.gov.

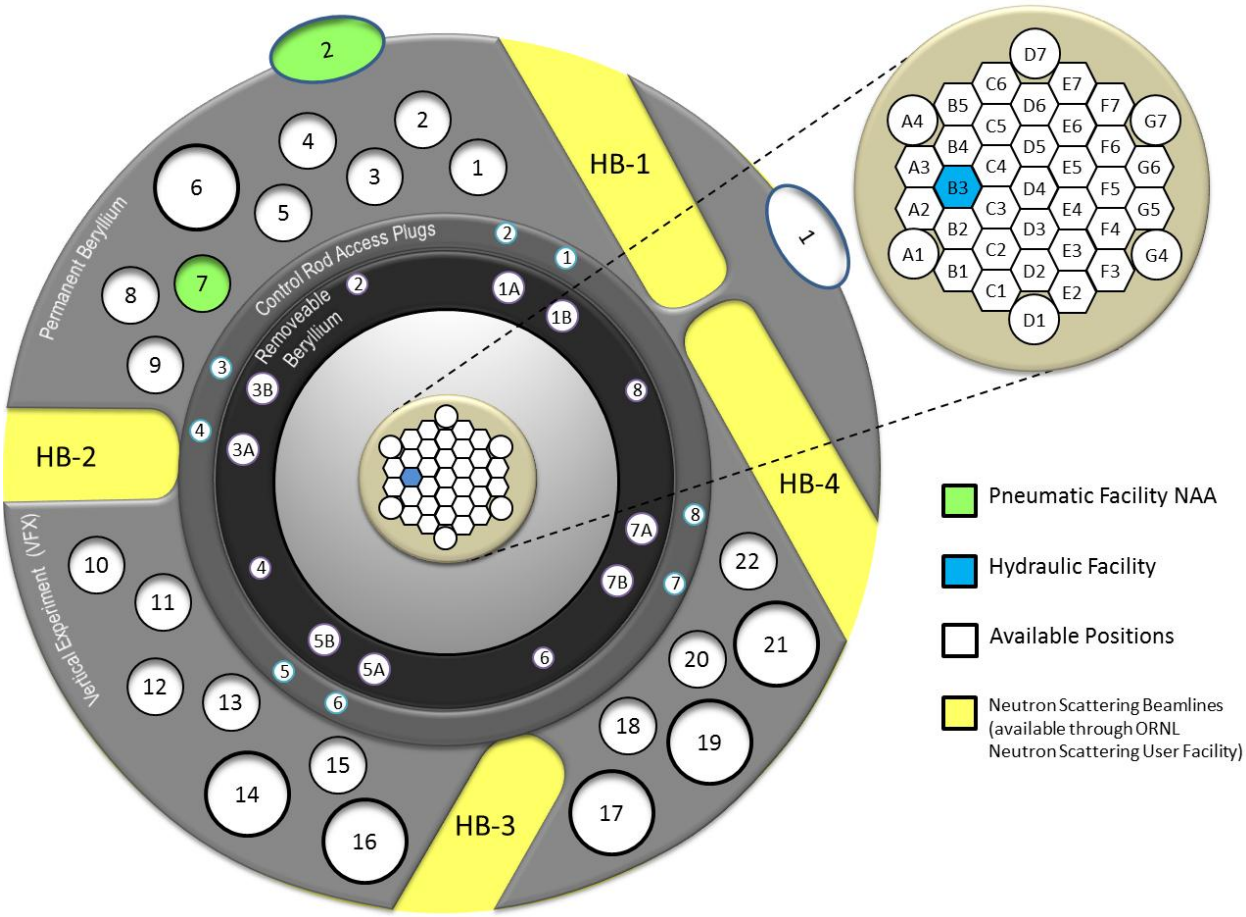

Figure 10: Experiment Positions at HFIR

In-Core experiment facilities that are available to the ATR User Program include:

1. Thirty **target positions** in the flux trap, which often contain transplutonium production rods but which can be used for the irradiation of other experiments (two of these positions can accommodate instrumented experiments).
2. The **hydraulic tube** irradiation facility, located in the very high flux region of the flux trap, which allows for insertion and removal of samples while the reactor is operating.
3. Six **peripheral target positions** located at the outer edge of the flux trap.
4. Numerous **vertical irradiation facilities** of various sizes located throughout the beryllium reflector.

5. Two **pneumatic tube facilities** in the beryllium reflector, which allow for insertion and removal of samples while the reactor is operating for neutron activation analysis.
6. Two **slant access facilities**, called "engineering facilities," located on the outer edge of the beryllium reflector.

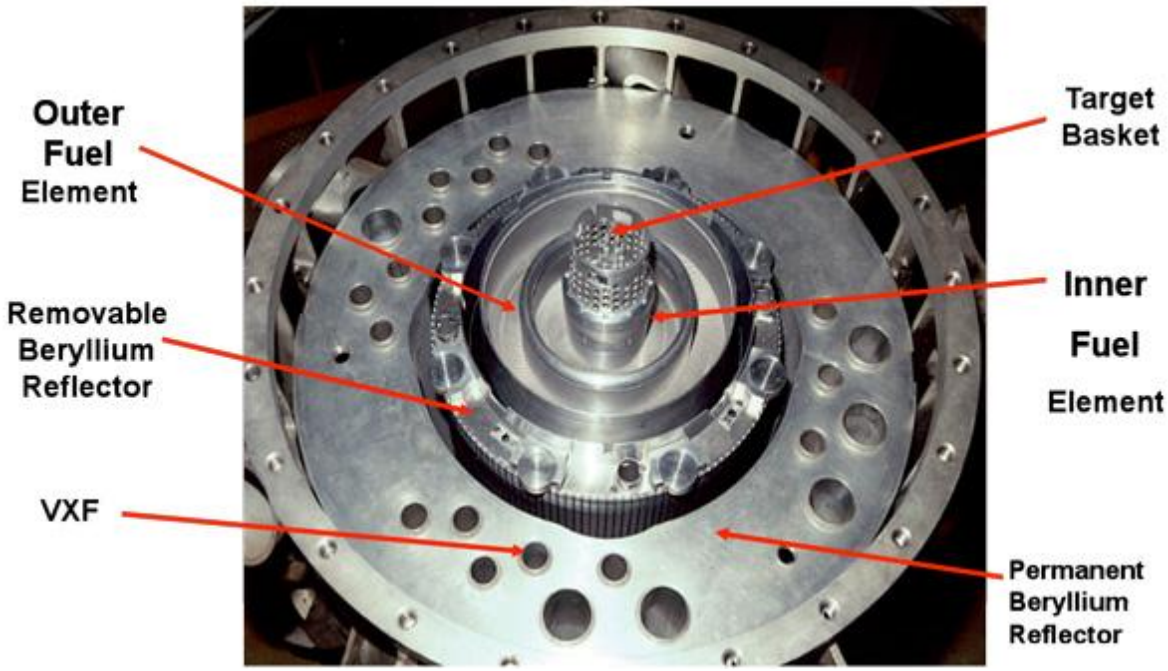

Figure 11: Photo of the HFIR Core

6.1 Flux Trap (Target Region)

Thirty-one target positions are provided in the flux trap. These positions were originally designed to be occupied by target rods used for the production of transplutonium elements; however, other experiments can be irradiated in any of these positions. We have developed a target capsule design that can be used in numerous areas in the reactor experiment facilities. The use of this type of irradiation capsule simplifies fabrication, shipping, and post-irradiation processing, which translates to a cost savings for the experimenter.

Target irradiation capsules of each type must be designed such that they can be adequately cooled by the water flow available outside the target-rod shrouds. Excessive neutron poison loads in experiments in target positions are discouraged because of their adverse effects on both transplutonium isotope production rates and fuel cycle length. Such experiments require careful coordination to ensure minimal effects on adjacent experiments, fuel cycle length, and neutron scattering beam brightness. Two positions are now available for instrumented target experiments: positions E3 and E6.

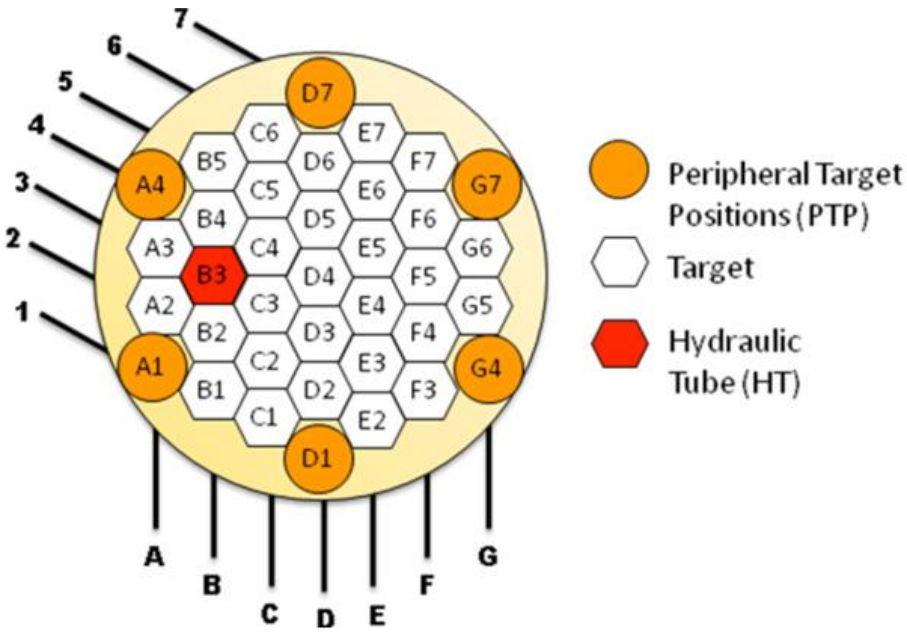

Figure 12: Target Region Experiment and Isotope Production Positions

6.2 Peripheral Target Positions

HFIR provides six peripheral target positions (PTPs). Fast-neutron fluxes in these positions are the highest available to experiments in the reactor, though there is a steep radial gradient in the thermal-neutron flux at this location.

Like the target positions, a type of PTP capsule is available that houses isotope or materials irradiation capsules, which are similar to the rabbit facility capsules. The use of this type of irradiation capsule simplifies fabrication, shipping, and post-irradiation processing, translating into cost savings for the experimenter.

PTP irradiation capsules of each type must be designed such that they can be adequately cooled by the available coolant flow. Typical experiments contain a neutron poison load equivalent to that associated with 200 g of aluminum and 35 g of stainless steel distributed uniformly over a 20-in. (50.8-cm) length. PTP experiments containing neutron poison loads in excess of this are discouraged because of their adverse effects on isotope production rates, fuel cycle length, and fuel element power distribution.

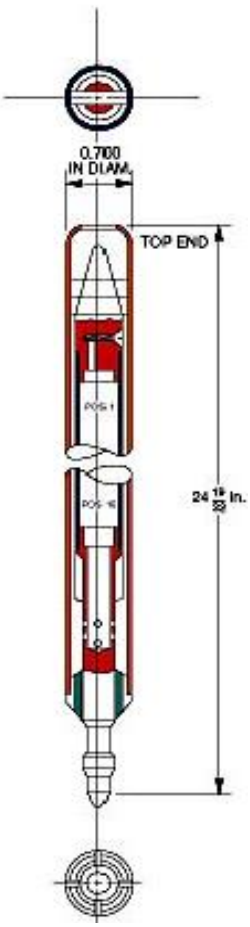

Figure 13: Example PTP Target

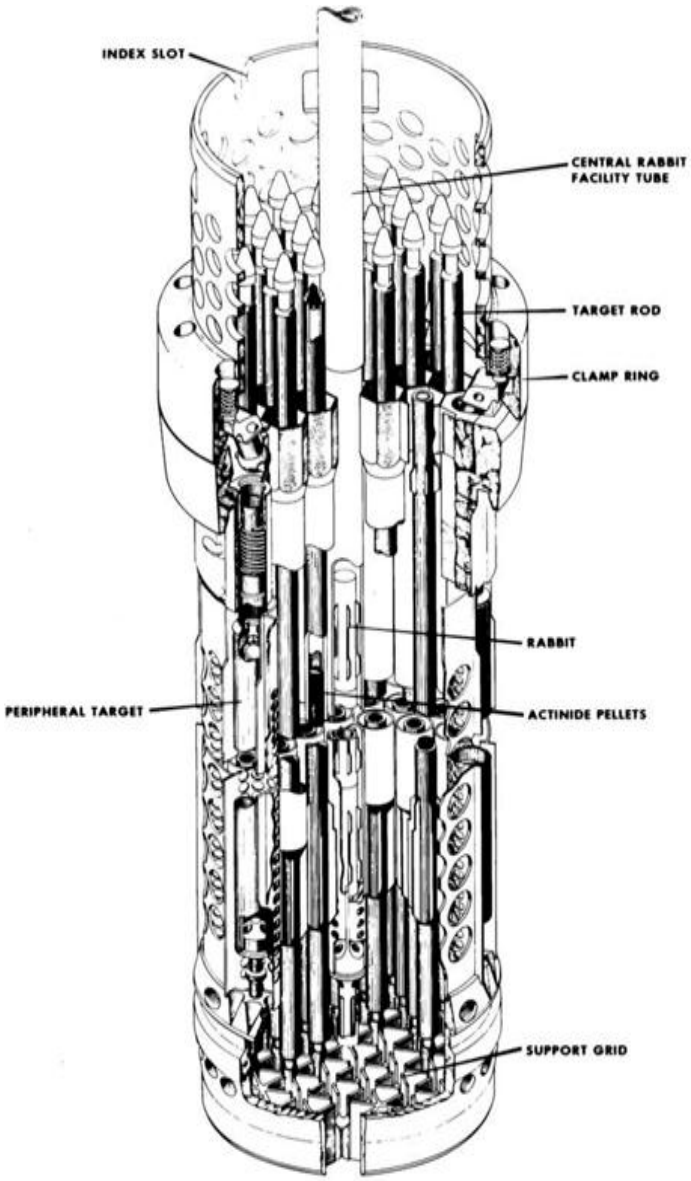

Figure 14: Cut-away view of Target Basket

6.3 Hydraulic Tube Facility

The HFIR hydraulic tube (HT) facility provides the ability to irradiate materials for durations less than the standard ~23-day HFIR fuel cycle, which is ideal for the production of short half-life medical isotopes that require retrieval on demand. The system consists of the necessary piping, valves, and instrumentation to shuttle aluminum capsules (called *rabbits*) between the capsule loading station and the flux trap in the reactor core.

Normally, the heat flux from neutron and gamma heating at the surface of the rabbit is limited to 74,000 Btu/h-ft² (2.3 x 105 W/m²). Furthermore, the neutron poison content of the facility load is limited such that the reactor cannot be tripped by a significant reactivity change upon insertion and removal of the rabbits.

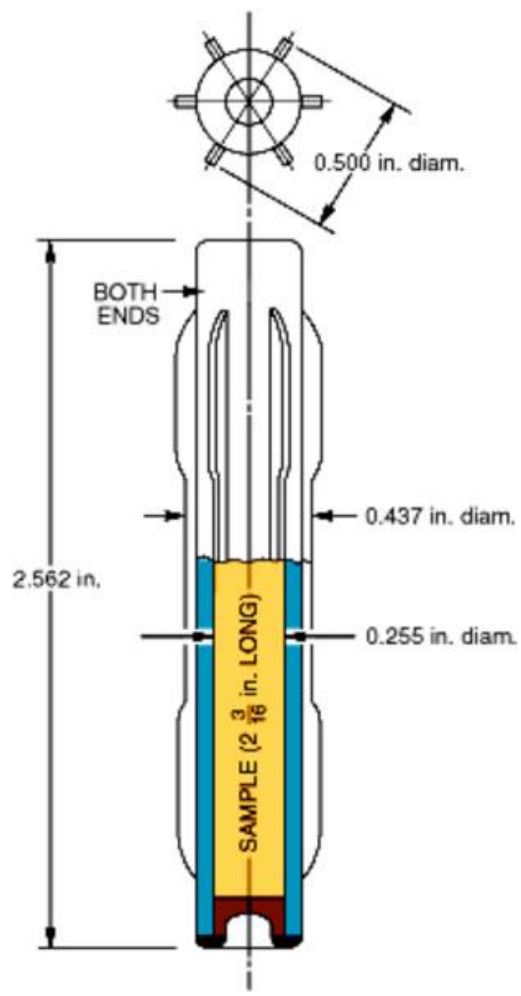

Figure 15: Typical finned rabbit design

6.4 Large Removable Beryllium Facilities

Eight large-diameter irradiation positions are located in the removable beryllium (RB) near the control region and are generally referred to as the RB* positions. These facilities are designed for either instrumented or non-instrumented experiments. The instrumented capsule design can also employ sweep or cooling gases as necessary. Instrument leads and access tubes are accommodated through penetrations in the upper shroud flange and through special penetrations in the pressure vessel hatch.

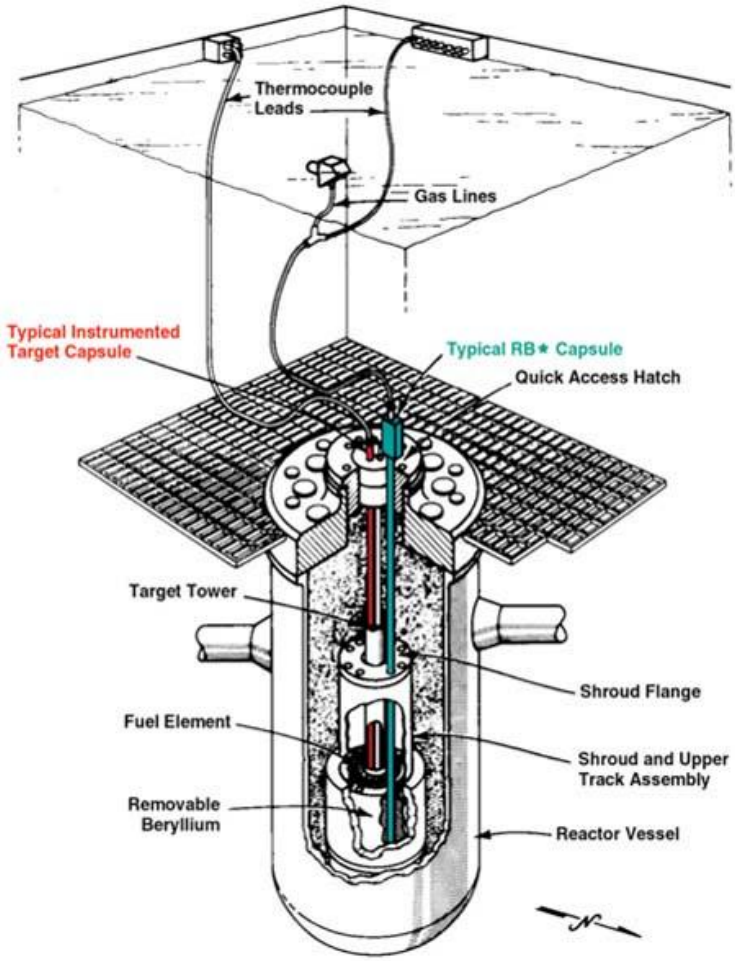

When not in use, these facilities contain beryllium or aluminum plugs. Because of their close proximity to the fuel, RB* experiments are carefully reviewed with respect to their neutron poison content, which is limited because of its effect on fuel element power distribution and fuel cycle length.

These positions can accommodate shielded and spectral tailored experiments, making them well suited for fusion materials irradiation.

Uses for the RB* facilities have included the production of radioisotopes; High Temperature Gas-Cooled Reactor (HTGR) fuel irradiations; and the irradiation of candidate fusion reactor materials. The later type of experiment requires a fast neutron flux. For this application the capsules are placed in a liner containing a thermal neutron poison for spectral-tailoring. These experiments are carefully reviewed with respect to their neutron poison content, and limited to certain positions to minimize their effect on adjacent neutron scattering beam tubes.

6.5 Small Removable Beryllium Facilities

Four small-diameter irradiation positions are located in the removable beryllium (RB) near the control region. The small RB positions do not have an aluminum liner like the RB* facilities. When not in use, these positions contain beryllium plugs.

These facilities have been used primarily for the production of radioisotopes. The neutron poison content limits and the available pressure drop requirements for experiments in these facilities are the same as in the RB* facilities previously discussed.

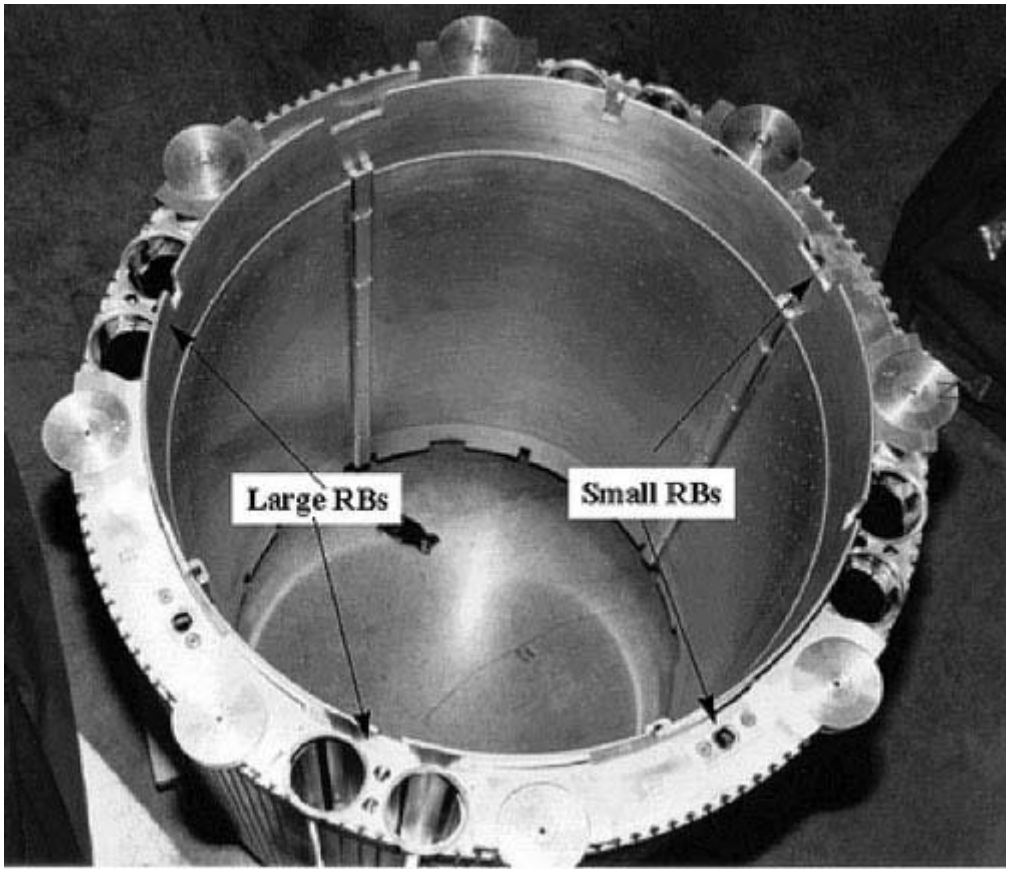

Figure 17: Removable Beryllium Experiment Positions

6.6 Small Vertical Experiment Facilities

Sixteen irradiation positions located in the permanent reflector are referred to as the small vertical experiment facilities (VXF). Each of these facilities has a permanent aluminum liner, located concentric within the core. Normally, non-instrumented experiments are irradiated in these facilities. VXF-7 is dedicated to one of the pneumatic irradiation facilities, which supports the Neutron Activation Analysis Laboratory (NAA) and is unavailable for other use.

A pressure drop of approximately 100 psi (6.89 x 105 Pa) at full system flow is available to provide primary system coolant flow for cooling experiments. When not in use, these facilities may contain a beryllium or aluminum plug or a flow-regulating orifice and no plug.

Large neutron poison loads in these facilities are of no particular concern with respect to fuel element power distribution perturbations or effects on fuel cycle length because of their distance from the core. However, experiments are still carefully reviewed with respect to their neutron poison content, which is limited to minimize their effect on adjacent neutron scattering beam tubes

6.7 Large Vertical Experiment Facilities

Six irradiation positions located in the permanent reflector are referred to as the large vertical experiment facilities. These facilities are similar in all respects (as to characteristics and capabilities) to the small vertical experiment facilities described in the preceding section except for location and size. When not in use, these facilities contain beryllium or aluminum plugs.

6.8 Slant Engineering Facilities

Provision has been made for installation of up to two engineering facilities to provide additional positions for experiments. These facilities consist of tubes that are inclined upward 49° from horizontal. The inner ends of the tubes terminate at the outer periphery of the beryllium. The upper ends of the tubes terminate at the outer face of the pool wall in an experiment room one floor above the main beam room. One of the engineering facilities houses the PT-2 pneumatic tube, which is used in the Neutron Activation Analysis (NAA) Laboratory.

7 Neutron Activation Analysis (NAA)

Neutron Activation Analysis (NAA) is an extremely sensitive technique used to determine the existence and quantities of major, minor and trace elements in a material sample. NAA differs from other methods in that it relies on the atom's nucleus and ignores chemical formulation, unlike mass-spectrometry or chromatographic methods.

NAA requires a source of neutrons, gamma-ray detectors and a thorough understanding of how elements react to neutron bombardment.

7.1 What is NAA used for?

Forensic Analysis: Personnel of the ORNL-NAA laboratory have considerable experience in the forensic analysis of evidentiary materials. Bullet fragments, gunshot residue, plastic, hair and fingernails, and geological materials are included among recent examples. Comparing materials nondestructively is a chief advantage of NAA for forensics.

High-Purity Materials: Materials such as high-purity silica, silicon, aluminum, other materials and their compounds that do not form long-lived radionuclides, cellulose air filters, as well as graphite are excellent matrices for high-sensitivity NAA. Such materials can be irradiated in graphite rabbits for many hours for determinations of many elements at the sub-ppb level. Silicon wafers and SiO_2 used in fiber optics are examples that have been analyzed.

Radiochemical *separations:* Extremely low quantities of certain elements (such as Ir) can be measured utilizing microwave digestion facilities available at ORNL and straightforward chemical separation techniques.

7.2 What Elements can we Measure?

Approximately 65 elements can be determined at levels ranging from parts-per-million to parts-per-trillion or below.

If the matrix to be analyzed does not become too radioactive when activated with neutrons, or if the unwanted radioactivity decays quickly, then groups of trace elements can often be measured simultaneously.

Figure 18: Elements detectible by NAA

7.3 The NAA Facility

Two pneumatic tube facilities designated PT-1 and PT-2, are available for Neutron Activation Analysis (NAA) work. These facilities consist of flight tubes, air supply and exhaust lines, loading stations at which samples containers (rabbits) are introduced into the flight tube, and irradiation stations to which the rabbits move to be irradiated. The inner diameter of the flight tubes is 0.62 in. (15.88mm) and the outer diameter of the rabbit is 0.56 in. (14.48mm).Both flight tubes accept the same rabbits, which have an internal volume of 1.5 cc. Both systems operate with air entering both ends of the flight tube. Capsules are inserted into the reactor and returned to shielding loading stations in the laboratory. The capsules stop at air columns, which permit them to be made of plastic or graphite. Graphite capsules can be irradiated for many hours, thus making NAA useful for detecting a wide variety of elements and isotopes.

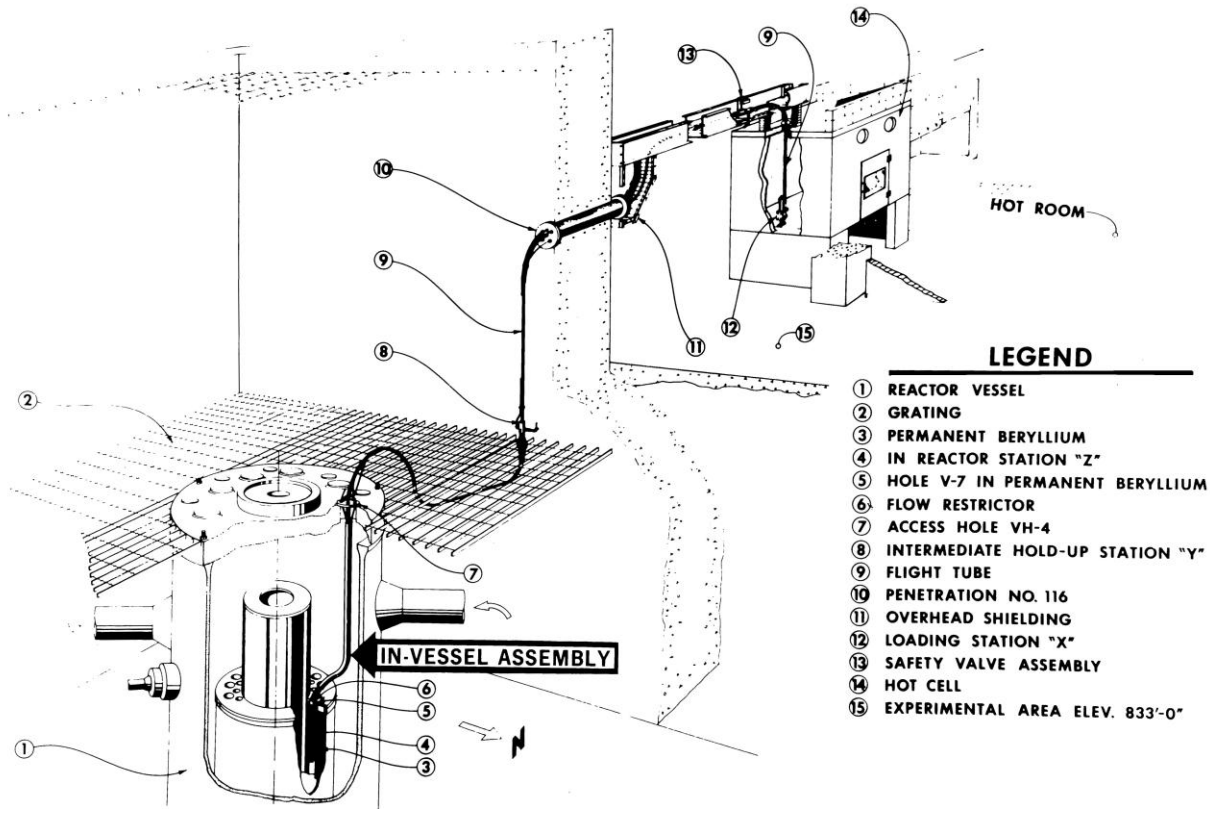

Figure 19: Flight Tube PT-1 from the NAA Lab to the Reactor

Some of the characteristics of each flight tube and loading station include:

PT-1: Thermal Neutron Flux: 4 X 10^{14} n cm-2 s-1	PT-2: Thermal Neutron Flux: 4 X 10^{13} n cm-2 s-1
• Thermal-to-Resonance Ratio: 35. • Shielded sample loading station with remote manipulators • Decay station in pool, • Rabbit travel time: 2.5 seconds.	• Thermal-to-Resonance Ratio: 250. • Loading station in hood. • Automated delayed-neutron counting station that will measure 20 - 30 picograms of ^{235}U or other fissile material in 5 minutes.

8 How to Work with ORNL and HFIR

There are several prerequisites to irradiating experiments at HFIR. This section describes the basic process of interfacing with ORNL and HFIR for an irradiation in the reactor core. Your location, affiliation or previous experience with ORNL will determine which method you use to establish a research relationship with ORNL.

8.1 Establishing a Relationship with User Facilities

One method of tapping the advanced facilities at Oak Ridge National Laboratory is to work through a specific experimental user facility. Please visit http://www.ornl.gov/adm/user_facilities/ to learn more about ORNL user facilities.

For most in-vessel irradiations that are non-proprietary and seeking assistance with funding, the National Scientific User Facility (NSUF) at ATR may provide a method for irradiating in HFIR. Please visit http://atrnsuf.inl.gov/ for more information, or contact HFIR Experiment personnel to assist you in submitting a proposal.

8.2 Working with HFIR through a Partnership

Once you have contacted the appropriate user facility, you will need to establish a partnership relationship with ORNL. Please visit http://www.ornl.gov/adm/partnerships/ for additional information regarding partnerships including

- Cooperative Research and Development Agreements (CRADA)
- Licensing Agreements
- Material Transfer Agreements (MTA)
- Work for Others (WFO) Agreements
- User Facility Agreements (UFA)

Additionally, if your work specifically involves the production or purchase or isotopes, please contact the isotope business office.

8.3 Working with the ORNL Isotopes Business Office

Whether for research or for commercial purposes, if you require radioisotopes for your work, you can contact the Isotope Business Office. http://www.ornl.gov/sci/isotopes/catalog.htm The Isotope Office can arrange cooperative agreements for your radioisotope work, and can coordinate with HFIR for irradiations as well as any pre- and post-irradiation work.

8.4 Basic Policies

Per Department of Energy rules, it is the policy of the HFIR and the Research Reactors Division (RRD) to review and approve all in-vessel HFIR experiments. The RRD NM&EA Group will help the experimenter ensure that the experiment:

- Poses no unacceptable risk to the safety of the reactor or personnel
- Poses no unreviewed safety question (USQ)
- Is in compliance with applicable HFIR Technical Safety Requirements (TSRs)
- Does not adversely affect the predictability or availability of reactor operations
- Does not adversely affect key research programs that fund the reactor

The scope of this policy is limited to the ORNL RRD review and approval processes, which were established to ensure the safety, reliability, and compatibility of in-vessel irradiation experiments. This policy does not cover the processes for:

- Obtaining Department of Energy (DOE) approval when required
- Obtaining National Environmental Protection Act (NEPA) approval when required
- Ensuring compliance with waste generation regulations
- Disposition (cask loading/shipment) of the experiment components after irradiation

The RRD NM&EA group will assist in navigating these policies as required.

8.5 The Overall Process

The overall process is broken into six activities in two main phases. (ATR-NSUF projects may follow a slightly different screening process)

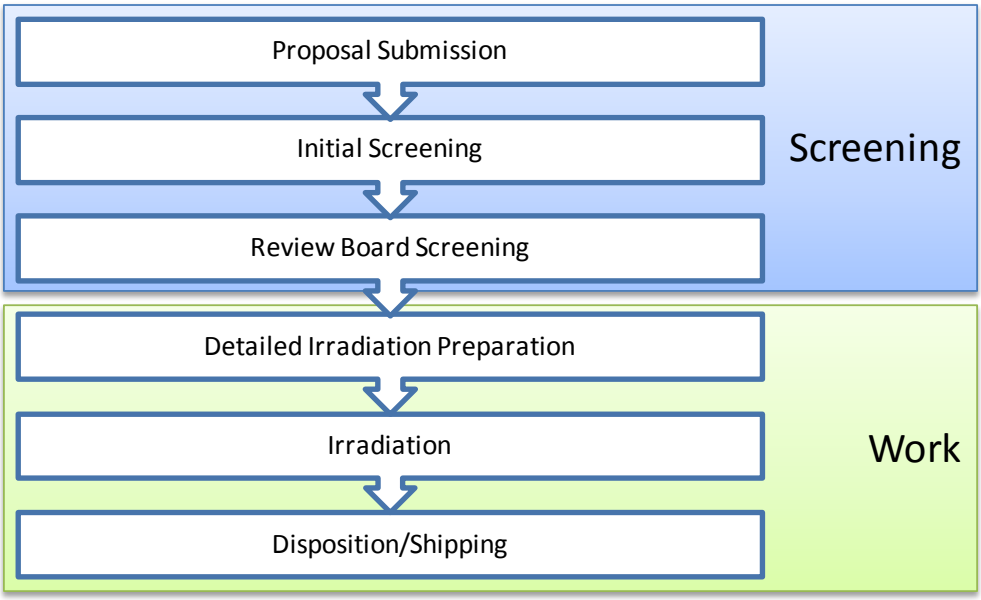

While the Principle Investigator will likely have had discussions with the funding source for the program regarding irradiations required for the experiments, in general, the P.I. should not seek funding approval for an experiment until it has completed the "Screening" phase of the approval process. It would be unfortunate for a program sponsor to be fully invested in an experiment that cannot be approved through the screening process.

8.6 The Screening Process

8.6.1 Submitting a Proposal

The first step in preparing for irradiation experiments in the HFIR core is to prepare a description of the proposed experiment. This should include the following

1. Purpose of the experiment
2. Sponsor (proposed funding source)
3. Whether the research will be published in the public domain
4. Preliminary list of materials to be irradiated (with quantities)
5. Desired flux exposure, operating temperatures, fluence, pressures or other experiment conditions
6. Proposed length of the irradiation
7. Desired irradiation date (month/year, see HFIR operating schedule)
8. Description of pre- or post-irradiation work including disposition and shipping of the irradiated materials

This information can be provided to HFIR via mail, email or phone. The HFIR web site (neutrons.ornl.gov/Facilities/HFIR) contains the appropriate contact information. Please contact HFIR staff to discuss your experiment and for assistance with this proposal process.

For those within ORNL, please visit the internal web page home.rrd.ornl.gov/experiments .

8.6.2 Proposal Review and Screening

Once the proposal is received, the following process occurs. (ATR-NSUF process may differ)

1. HFIR reviews the proposal. If the experiment materials, quantities and parameters fall within the bounds of previously approved experiments, then HFIR will approve the experiment. See the Attachments section for a partial list of previously approved irradiations.

2. If there is no precedent for the experiment, then a preliminary evaluation will be performed to determine if there are obvious safety or other potential issues that need to be reviewed further. If there are no obvious safety or procedural barriers to performing the irradiation, then the experiment will be sent to the ORNL Nuclear Facilities Review Board where it will be evaluated.

3. If the ORNL-Nuclear Facilities Review Board decides to decline an irradiation, it may or may not be possible to have it reviewed again, depending on the reasons for its dismissal. If the irradiation is approved, then the principle investigator can begin the process of preparing for the irradiation with the assistance of HFIR.

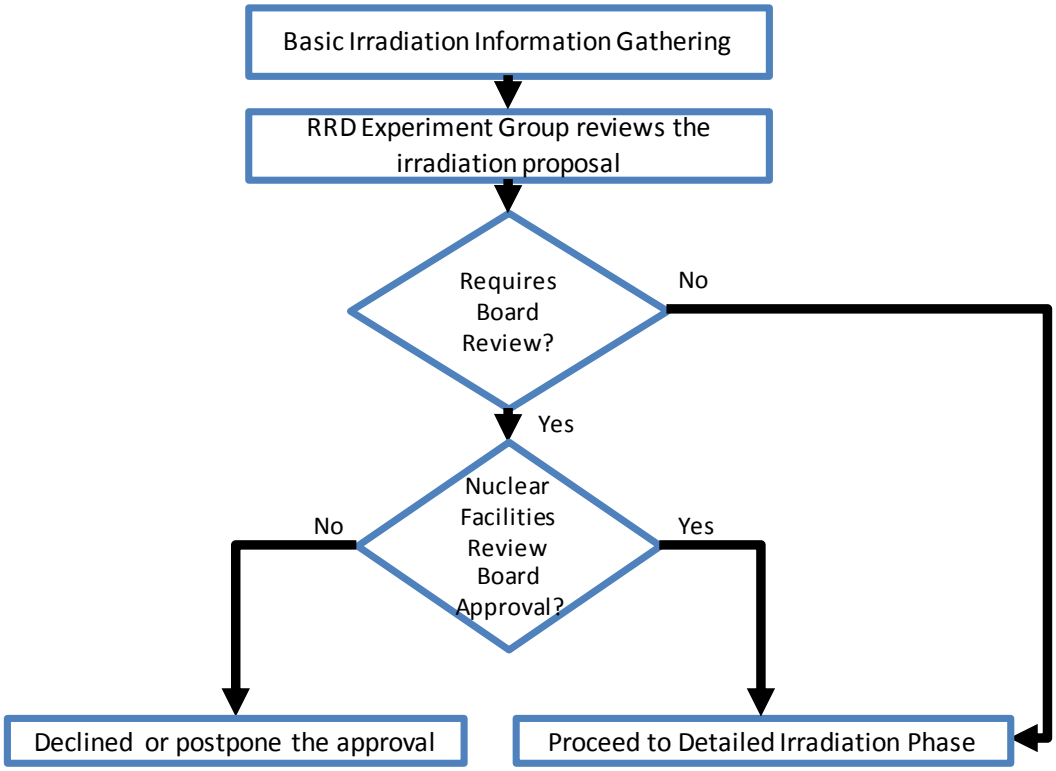

HFIR Irradiation Proposal and Screening Process (ATR-NSUF process may differ)

8.7 Preparing for the Irradiation

In order for an experiment to be installed in the reactor vessel, a series of QA and safety questions need to be documented and reviewed. The fundamental approval documents for irradiating in HFIR include 1) the Experiment Authorization Bases Document (EABD) and 2) the Fabrication Documentation (Fab File). Usually these documents completely describe the technical aspects of the irradiation including the geometric and material specifications for the targets, tools and equipment required to perform the experiment. Additionally, these documents refer to supporting calculations describing heat loads and thermal-hydraulic characteristics of the experiment.

Some experiments can leverage the work of others in that their experiment may fall within certain boundaries that have already been performed at HFIR. In this case, the majority of the preparation time is the validation of thermal-hydraulic calculations, and documentation and review of the Fabrication File.

If the experiment scope falls outside the bounds of a previously approved experiment, then it will require more significant review and the creation of a new EABD or modification of an existing EABD. The technical staff at HFIR will guide and assist you in this effort.

9 Experiment Design Requirements

9.1 Quality Assurance Requirements

The quality assurance (QA) program for HFIR is based on 10 CFR 830, Subpart A requirements and implementation practices from ASME/NQA-1. All experiments, rabbit capsules, and isotope targets to be irradiated in HFIR must be designed and fabricated under an equivalent set of controls. The experiment's quality program will be reviewed for approval by the Research Reactors Division (RRD) QA personnel prior to acceptance of an experiment into the irradiation program. Experimenters are expected to exercise strict controls over material certification, traceability, and handling, fabrication dimensional tolerances and inspection, containment integrity testing, and cleaning.

The specific design of the experiment will be reviewed and approved by RRD technical personnel following an established process. Deviations and nonconformances to approved designs are required to be reviewed and approved by RRD. Experiment fabrication facilities may be audited by RRD QA personnel for program implementation compliance. The experiment's fabrication records will be reviewed and approved prior to acceptance of the hardware for irradiation in HFIR.

9.2 Approved Rabbit Housings Designs

The term rabbit housing refers to the outer capsule (typically aluminum) used to contain the sample material. The rabbit housing is in direct contact with the reactor primary coolant.

A total of 6 different rabbit housing designs are approved in the EABD. Five of the rabbit housings designs are hermetically sealed by welding and prevent direct contact of the enclosed sample material with the reactor coolant. The sixth design, the "perforated rabbit", allows for direct contact of the sample material with the reactor coolant. The perforated rabbit is used only when low sample material test temperatures are required and only when the enclosed sample material is non-frangible and compatible with the reactor coolant.

A brief description of the six rabbit housings approved in the EABD and the applicable design/fabrication requirements imposed on the rabbit housings is given below. With the exception of the non-finned selenium rabbit, all rabbit housings have been previously approved and used to successfully conduct irradiations in the target region rabbit irradiation facilities.

9.2.1 Standard Finned Rabbit

The standard finned rabbit is detailed on drawings N3E020977A036-Rev0 and N3E017045A012-Rev0 (available from the HFIR NM&EA group). The rabbit consists of 3 pieces – a finned housing tube fabricated from extruded 6061-T6 aluminum and two 6061-T6 aluminum end plugs that are welded to the housing tube. The integrity of the end welds is ensured by visual inspection, helium leak testing and external pressure testing. The rabbit has been designed for an external operating pressure of 1000 psig. The internal burst pressure of an un-irradiated rabbit is approximately 5000 psid.

The standard finned rabbit is the original rabbit design developed for use in the original single tube hydraulic facility and has been successfully used over the past 40 years to conduct irradiations in the hydraulic tube, PTP and Target Rod Rabbit Holder facilities. The rabbit is used primarily to conduct irradiations in support of isotope production.

9.2.2 Increased Bore Finned Rabbit

The increased bore rabbit is detailed on drawing X3E020977A541-Rev 0 (available from HFIR). The rabbit consists of 3 pieces – a finned housing tube fabricated from extruded 6061-T6 aluminum and two 6061-T6 aluminum end plugs that are welded to the housing tube. The integrity of the end welds is insured by visual inspection, helium leak testing and external pressure testing. The rabbit external dimensions are identical to the standard finned rabbit, but the inside diameter has been increased from 0.258” to 0.324" to provide a larger internal volume for the sample material. The rabbit has been designed for an external operating pressure of 715 psig. The internal failure pressure of the rabbit has not been calculated. Scaling the result of the burst pressure tests conducted on the standard finned rabbit by the wall thickness results in an internal failure pressure of nominally 2100 psi.

The increased bore finned rabbit has been previously approved and used to conduct irradiations in the B-3 hydraulic tube, PTP and Target Rod Rabbit Holder facilities. The rabbit is used primarily to conduct irradiations in support of materials irradiation testing.

9.2.3 Reduced Bore Finned Rabbit

The reduced bore finned rabbit is detailed on drawing N3E017045A037-R0 and N3E017045A036-R0 (available from HFIR). The rabbit consists of 3 pieces – a finned housing tube fabricated from extruded 6061-T6 aluminum and two 6061-T6 aluminum end plugs that are welded to the housing tube. The integrity of the end welds is insured by visual inspection, helium leak testing and external pressure testing. The rabbit external dimensions are identical to the standard finned rabbit but the inside bore of the rabbit has been decreased from 0.258” to 0.170”. The reduced bore rabbit is used to minimize the gas gap (sample temperature) between the rabbit and sample material when irradiating small diameter samples. As a result of the increased wall thickness, the external pressure rating of the reduced bore exceeds 1000 psig and the internal burst pressure would exceed 5000 psig.

The reduced bore finned rabbit has been previously approved and used to conduct irradiations in the B-3 hydraulic tube, PTP and Target Rod Rabbit Holder facilities. The rabbit is used primarily to conduct irradiations in support of isotope production.

9.2.4 Un-finned Rabbit

The un-finned rabbit design is shown on drawing X3E020977A536-Rev B and X3E020977A538-Rev 0 (available from HFIR). The rabbit consists of two parts; a housing tube machined from 6061 aluminum and an upper end cap fabricated from 4043 aluminum. The end cap is secured to the housing by electron beam welding. A small diameter hole at the bottom of the housing tube, intended to provide pressure relief when welding the upper end cap, is closed by conventional arc welding. The integrity of the end welds is insured by visual inspection, helium leak testing and external pressure testing. The rabbit has been designed for an external pressure of 690 psig. Internal pressure tests conducted on the un-finned rabbit indicate that the rabbit fails at the end cap weld at a nominal pressure of 3000 psig prior to significant radial expansion of the rabbit housing walls. Failure at the end cap under internal pressure prior to significant radial expansion of the housing tube is an intentional design feature that ensures

closure of the coolant channel cannot occur if the rabbit unexpectedly develops internal pressure. Because the internal pressure tests demonstrating the failure mode were conducted on end welds performed with e-beam welding, only e-beam welding is allowed to secure the upper end cap.

The un-finned rabbit has been previously approved and used to conduct irradiations in the “3 tube” hydraulic tube, PTP and Target Rod Rabbit Holder facilities. The rabbit is used primarily to conduct irradiations in support of materials irradiation testing.

9.2.5 Un-finned Selenium Rabbit

The un-finned selenium rabbit design is shown on drawing X3E020977A543-Rev A and X3E020977A544-Rev A (available the HFIR). The external dimensions of the rabbit are identical to the un-finned rabbit described above. The rabbit consists of two parts; a housing tube machined from 6061 aluminum bar stock and an upper end cap fabricated from 4043 aluminum. The housing tube contains three drilled holes for loading vanadium or titanium encased selenium pellets. The end cap is secured to the housing by electron beam welding. A small diameter hole at the bottom of the housing tube, intended to provide pressure relief when welding the upper end cap, is closed by conventional arc welding. The integrity of the end welds is insured by visual inspection, helium leak testing and external pressure testing. Due to the similarity of the housing design with the un-finned rabbit, the external pressure rating of the un-finned selenium rabbit housing will meet or exceed the 690 psig rating associated with the non-finned rabbit. Also since the upper end weld configuration is identical to the un-finned rabbit, the internal failure pressure of the selenium rabbits is the same as that of the un-finned rabbit (3000 psig). As with the un-finned rabbits, failure at the end cap prior to radial expansion is an intentional design feature that ensures the flow channel would remain open if the rabbit were to fail due to internal pressure.

The un-finned selenium rabbit design is used exclusively for selenium pellet irradiations. Although the rabbit housing has not been previously irradiated, it is considered to be essentially identical to the un-fined rabbit which has been previously irradiated. It should also be noted that selenium pellets irradiations are also routinely conducted in the standard finned rabbit.

9.2.6 Perforated Rabbit

The perforated rabbit is detailed on drawing X3E020977A542-Rev 0 (available from HFIR). The rabbit consists of an aluminum housing tube (0.438 O.D. * 0.38" I.D. * 2.48"L), which is perforated by 82 small diameter (0.089") holes and two aluminum end caps that are attached to the housing by crimping. The perforations allow direct contact of reactor coolant with the enclosed test specimens in order to maintain test specimen temperatures as low as possible.

The perforated rabbit has been previously approved and successfully used to conduct irradiations in the “old” hydraulic tube facility and the PTP/Target rod rabbit holder tubes. The perforated rabbit is used exclusively for material irradiation testing when low sample material test temperatures are required.

All sample materials to be irradiated in the perforated rabbit must be compatible with the reactor primary coolant, non-frangible (or enclosed in a secondary container), and sized to ensure the specimens cannot escape or protrude through the rabbit perforations.

9.3 Rabbit Housing Design Requirements (for various experiment positions)

Key design/fabrication requirements imposed on and met by all rabbit housings designs described above are discussed below.

1) **The housing materials must be compatible with the reactor primary coolant water.**

   Material compatibility ensures that there is no potential for corrosion of reactor fuel or reactor components. All of the rabbit housing designs approved in the EABD are constructed from aluminum, and therefore meet this requirement.

2) **The rabbit housing must be sized to ensure proper fit into the irradiation facility, and in the case of the hydraulic tube free transport between the reactor core and the in-pool loading station.**

   The dimensional envelopes of all rabbit housing designs approved in the EABD meet this requirement and rabbits of these sizes have been used on routine bases to conduct irradiations in the PTP and Target Holder Tubes.

3) **The rabbit housing must be sized to ensure that the irradiation facility coolant flow rates cited below are not reduced.**

   - PTP Rabbit Holder Tubes: 3.66 gpm at 35.5 psi target basket pressure loss
   - Target Rod Rabbit Holder Tubes: 7.41 gpm at 35.5 psi target basket pressure loss
   - Hydraulic Tube facility: 4 gpm at 35.5 psi target basket pressure loss

   These flow values have been established as bounding input values to the heat transfer calculations used to determine the acceptability of the sample loading configuration within the rabbit and the aggregate rabbit loading configuration in the irradiation facility.

   With respect to coolant flow rates, there are two basic types of rabbit designs approved in the EABD – an un-finned rabbit and a finned rabbit. Of these two designs, the un-finned rabbit is more restrictive to flow.

   The minimum flow rates cited above for the PTP and Target Rod rabbit holder are based on flow measurements conducted with the maximum number of un-finned rabbits that may be loaded into the facility tube.

   The value cited for the hydraulic tube is the minimum flow value cited in the USAR which in turn is based on irradiation experience with the “old” B-3 hydraulic tube design. Since the design features related to rabbit coolant flow rates (line and orifice sizes) are essentially identical to the former “B-3” hydraulic tube and since flow testing in the new B-3 rabbit facility confirms there are no significant flow changes, the 4 gpm value remains valid. The operating procedure for the hydraulic tube (PWP-1170) also requires rabbit ejection if the measured rabbit coolant flow < 4.2 gpm

The driving pressure associated with the minimum flow values cited above will vary with the target basket loading configuration. When loaded with 31 Cm targets or shrouded dummy aluminum assemblies (the original design bases for the target basket), the pressure loss across the target basket is 35.5 psi. When Cm or dummy targets are removed from the target basket and replaced by experiment assemblies, Target Holder Tubes, or the B3 hydraulic tube, the driving pressure across the target basket is increased and the coolant flow in the rabbit irradiation facilities will be increased. The 35.5 psi pressure loss therefore represents the minimum pressure loss available to induce the flow.

4) External pressure/temperature rating of seal welded rabbits shall be greater > 690 psig at 200 F.

The external pressure/temperature rating ensures that the rabbits are capable of withstanding maximum credible reactor pressure without failure.

The design of all rabbits approved in the EABD has been evaluated and meets this requirement.

5) Internal pressure/temperature rating of seal welded rabbits:

Seal welded rabbit housing designs must include features that ensure rabbit housing failure due to unexpected internal pressure associated with credible fabrication errors would not result in closure of the irradiation facility coolant flow channel.

Potential failure modes leading to internal pressure development within the rabbit housing are discussed in the safety documentation cited in ATT A. Two types of conditions leading to internal pressure have been identified:

- Those associated with the enclosed sample material components such as radiation stability (phase changes due to melting, radiolysis, gas evolution) or failure of enclosed components that are pressurized (e.g. pressurized tube specimens or bellows) and
- Those associated with fabrication errors such as improper cleaning of the specimen material or reactor coolant in-leakage through a faulty end weld and subsequent “water-logging” accident.

Prevention of internal rabbit over-pressure due to the sample material components is accomplished by limiting the quantity and type of sample material enclosed in the rabbit (see section 2 – requirements 3 and 5).

Credible fabrication errors that can lead to rabbit failure include improper cleaning (pressures due to radiolysis or cleaning agents) or water in-leakage due to a faulty end weld (thermal expansion of trapped water via a “water-logging event) . Design of the rabbit to withstand potential the internal pressures associated with these two low probability failure modes cannot be reasonably achieved without severely restricting the volume need for the sample material.

The pressure that could develop as a result of the above fabrication errors could potentially cause the rabbit housing to expand to and lodge against the facility tube walls. The resultant flow blockage could lead to failure of other rabbits located in the facility tube.

With respect to failure under internal pressure, there are two basic types of rabbit designs approved in the EABD – a finned rabbit and an un-finned finned rabbit.

Although the finned rabbit could potentially expand against the facility tube walls, the flow channel cannot be completely blocked due to the presence of the fins. To date, there has been only one documented failure of the standard finned rabbit. The failure was attributed to internal pressure development associated with formation of radiolysis gases due to improper cleaning of the enclosed sample material. The failure, which occurred during irradiation in the hydraulic tube, did not block the coolant flow or prevent normal retrieval of the rabbit. The finned rabbits approved in the EABD therefore meet the requirement.

Internal pressure tests conducted on the un-finned rabbit indicate that the rabbit fails at the end cap weld at a nominal pressure of 3000 psig prior to significant radial expansion of the rabbit housing walls. Failure at the end cap prior to radial expansion is an intentional design feature that ensures the flow channel would remain open if the rabbit were to fail due to internal pressure. The un-finned rabbits approved in the EABD therefore meet the requirement.

6) **Welding/ Weld Inspections: Rabbit end welds must be performed in accordance with approved welding procedures. The end welds must be inspected visually, and by helium leak testing.**

The welding requirements ensure that the potential for failure of a seal welded rabbit due to a water-logging event described above is extremely low.

Welding requirements specified on the design drawings ensure that the above requirement is met for all rabbit designs approved in the EABD. Verification of compliance with the drawing requirements is met by QA review of fabrication records associated with the as-built rabbit prior to acceptance of the rabbit for irradiation.

7) **External Pressure Testing: Seal welded housings must be externally pressure tested at 1035 psig. A second helium leak test to confirm weld integrity after the pressure test must be conducted.**

The pressure/leak testing requirements ensure that the potential for failure of a rabbit due to a manufacturing defect is extremely low.

The above requirement is reflected in either the design drawings or assembly procedure used to fabricate all of the rabbits approved in the EABD. Verification of compliance with the external pressure/leak testing requirement is met by QA review of fabrication records associated with the as-built rabbit prior to acceptance of the rabbit for irradiation.

8) **Dimensional Inspection: Dimensions affecting the external pressure rating, coolant flow, coolant flow gaps, or fit /travel within the irradiation facility or dimensions affecting sample**

material containment (perforated rabbit) must be inspected per RRD-JS-31 (contact HFIR NM&EA for this standard).

- This requirement ensures dimensions used as part of safety bases calculations or that effect fit in the facility are within tolerance.

- The above requirement is reflected the design drawings used to fabricate all of the rabbits approved in the EABD. Verification of compliance with dimensional requirements is met by the QA review of fabrication records associated with the as-built rabbit that are conducted prior to acceptance of the rabbit for irradiation.

9) **The completed assembly must be cleaned with acetone and alcohol per RRD-JS-24.**

   This requirement prevents undesirable contamination of the primary coolant system.

   The cleaning requirement is reflected in either the design drawings or assembly procedure used to fabricate all of the rabbits approved in the EABD. Verification of compliance with cleaning requirements is met by QA review of fabrication records associated with the as-built rabbit prior to acceptance of the rabbit for irradiation.

9.4 Requirements Imposed on Sample Materials Enclosed in the Rabbits

Sample materials approved for irradiation in the various rabbit housing designs are listed in Tables 1 through 5 of ATTC.

All sample materials meet the following criteria:

1) **The materials are not explosive or capable of detonation in the unlikely event of contact with the reactor coolant.**

   The criterion ensures compliance with TSR 3/4.9 and USAR chapter 10 experiment design criteria which restrict irradiation of explosives or materials which under credible circumstances can detonate. The criterion is intended to prevent damage to adjacent reactor components or experiments.

2) **The materials in the quantity and form present are stable under irradiation and not capable of creating over pressure that would lead to rabbit failure by phase changes, radiolysis or gas evolution.**

   The criterion ensures the potential for rabbit failure due to internal pressure is low.

3) **The materials in the quantity and form present are compatible with the reactor coolant.**

   The criterion ensures that material releases due to rabbit failures would not be capable of causing significant corrosion of key reactor components (aluminum fuel element cladding, stainless steel piping).

4) **The materials in the quantity and form present are not capable of creating a significant offsite**

radiological release in the event of rabbit housing failure.

The criterion ensures rabbit failures are not capable of increasing evaluated off-site dose consequences.

5) **The materials are compatible with the aluminum rabbit.**

This criterion ensures a low probability of rabbit failure. In addition to the above criteria, the following additional criteria are applied to sample materials irradiated in the perforated rabbits:

6) **The materials are non-frangible or enclosed in secondary containers.**

This criterion ensures a low potential for loose parts generation due to flow vibration or impact in the HT.

7) **The materials are not expected to undergo significant corrosion due to exposure to the primary coolant or are clad or enclosed in a sealed secondary container.**

This criterion is to minimize primary coolant contamination and the potential for loose parts generation.

9.5 Constraints Imposed on Sample Material Loading Configuration Within the Rabbit

The EABD limits the both the quantity of approved sample material and the sample material loading configuration within the rabbit to values that ensure:

1) **Significant fuel element power tilts are not possible.**

This criterion ensures margins for fuel element power tilts due to experiments are not exceeded.

2) **Interior component temperatures are not be capable of causing rabbit failure under worse case off-normal steady state reactor operation defined as 130% reactor over-power (110.5 MW) with the rabbit positioned at the reactor mid-plane.**

This criterion ensures a low probability of rabbit failure due thermal expansion/irradiation swelling or phase changes of the enclosed sample material.

3) **Rabbit housing internal pressure associated with failure of enclosed pressurized components does not exceed 50% of the rabbit housing internal failure pressure.**

This criterion ensures a low probability of rabbit failure due to internal pressure.

4) **Mechanical wall stresses associated with pressure component failure or pressurized component restraint failure are not capable of causing rabbit housing failure or deformations that would result in 50% coolant flow channel blockage.**

This criterion ensures a low probability of rabbit failure due to wall stress and ensures housing expansions due to wall stress would not lead to significant coolant flow blockage.

10 References

1. R. D. Cheverton and T. M. Sims, HFIR Core Nuclear Design, ORNL-4621 (July, 1971).

2. T. M. Sims and J. H. Swanks, High Flux Isotope Reactor (HFIR) Experiment Facilities and Capabilities, ORNL (November, 1979)

3. T. V. Blosser and G. E. Thomas, Jr., Neutron Flux and Neutron and Gamma-Ray Spectra Measurements at the HFIR, ORNL-TM-2221 (June 24, 1968).

4. T. A. Gabriel, B. L. Bishop and F. W. Wiffen, Calculated Irradiation Response of Materials Using Fission Reactor (HFIR, ORR, and EBR-II) Neutron Spectra, ORNL/TM-6361 (1979).

11 Attachments

Table 2: Approved Materials for use in the Non-Finned Rabbit or Increased Bore Rabbit

- X3E020977A536 - Rev- B "Target Capsule Housing Assembly" or
- X3E020977A541- Rev 0 "Target Capsule Housing Assembly and Details

Material	**Restrictions**
Aluminum , Aluminum Alloys, Aluminum Oxide	None
Barium , Barium Oxide	None
Beryllium and Beryllium Alloys	None
Bismuth	None
Carbon , Graphite, Graphite Composites	None
Copper and copper alloys	None
Cobalt	None
Hafnium and hafnium alloys	None
Holmium, Holmium Oxide	None
Iron	None
Molybdenum, Oxide Dispersion Strengthened Mo (ODS), Mo92 enriched molybdenum, Titanium Zirconium Molybdenum(TZM), Molybdenum-Rhenium Alloys (Mo-41Re, Mo-47.5 Re)	None
Nickel and Nickel Alloys including Inconel and Incalloy	None
Niobium and Niobium Alloys containing Zr, W and Ta	None
Palladium	None
Silicon Carbide and Silicon Carbide Composites	None
Steel and Steel alloys	**^{10}B content to be considered in heat generation calculations due to (n, α) reactions**
Tantalum and Ta alloys	None
Titanium and titanium alloys	None
Tungsten	None
Vanadium and Vanadium Alloys	None
Zirconium and Zirconium Alloys	None

Table 3: Approved Materials for use in the Perforated Rabbit Housing

- X3E020977A542-Rev0 "HFIR Perforated Rabbit Assembly and Details Model 2A"

Sample Material	Restrictions
Al / Al oxide	None
Mo	None
Nickel and Nickel Alloys	None
Nb	None
Pd	None
Stainless Steel	None
Titanium and Titanium Alloys	None
V and V/Ti/Cr alloys	None
SiC / SiC composites	**To prevent loss of fragments, SiC specimens having thickness smaller than the rabbit perforation diameter shall be wrapped in aluminum foil. The foil may be sealed or un-sealed. Specimens having thickness greater than the rabbit perforation diameter may be irradiated bare.**
Ceramic Materials Spinnel ($MgAl_2O_4$) Aluminum Nitride (AlN) Silicon Nitride (Si_3N_4) Beryllium Oxide(BeO)	**To prevent loss of fragments, ceramic materials shall be wrapped in aluminum foil. The foil may be sealed or un-sealed.**
Fe / Fe oxide	**To prevent contamination of primary coolant with Fe corrosion products, Fe specimens shall be enclosed in seal welded aluminum envelopes.**
W / W oxide	**To prevent contamination of primary coolant with W corrosion products, W specimens shall be enclosed in seal welded aluminum envelopes.**
Cu and Cu/Cr/Zr alloy	**To prevent the release of Cu ions to the primary coolant and potential pitting corrosion of the fuel cladding, all Cu specimens shall be plated with aluminum and placed in a seal welded aluminum envelop.**
Dielectric Mirrors: Al2O3 coated with either SiO2, HFO2 or Al2O3	**To prevent loss of fragments, materials shall be wrapped in aluminum foil or provided with secondary containment. The foil/secondary containment may be sealed or un-sealed.**

Table 4: Approved Materials for use in the Non-Finned Selenium Rabbit Housing

- X3E020977A543-RA "Selenium Capsule Assembly"

Material	**Restrictions**
Selenium or $VSe_{1.9}$ encapsulated in Vanadium or Titanium	**See notes on assembly drawing for limits on the number and type of pellets that may be loaded into the rabbit. Housing must be backfilled with helium gas.**

Table 5:Approved Materials for use in the Reduced Bore Finned Rabbit Housing

- N3E017045A037-Rev 0 or Rev1 "HFIR Hydraulic Tube Irradiation Capsule (4.32mm) (Se-Type) Assembly@

Material	**Restrictions**
Selenium or $VSe_{1.9}$ encapsulated in Vanadium or Titanium	**See Note 4 of assembly drawing for limit on number of pellets and location**

Table 6:Approved Materials for use in the Std. Finned Rabbits or Reduced Bore Finned Rabbit

- N3E020977A036- Rev 0 "HFIR Hydraulic Tube Irradiation Capsule Assembly and Details"
- N3E017045A012- Rev 0 "HFIR Hydraulic Tube Irradiation Capsule Assembly (NMG Type)"

Sample Material	Quantity grams	Chemical Form(s)	Physical Form(s)	Density g/cc	M.P. C	B.P. C	Encapsulation	Restrictions	Comments
Barium Enriched Ba-132 > 20% Ba-130 > 5%	≤ 1.0 ≤ 0.1	Metal BaO $BaCO_3$*	powder, chips powder, chips	3.51 5.72	725 1918	1640 2000	Synthetic SiO_2 ampule -6 mm OD or less	*Carbonate form ($BaCo_3$) limited to <4mg due to internal pressure	Product: Ba-133 Applications: Calibration Sources
Cadmium Covered Flux Monitors (Au, Ag, Be, Np or other appvd sample materials)	14 grams	Metal CdO	powder, chips powder, chips	8.642 6.95	320.9 >1500	765 d 900-1000	Synthetic SiO2 ampule -6 mm OD or less	Single Rabbit in HT (at a time) at Low Reactor Power (≤ 12 Mw) to prevent reactor trip.	Measurement of HT fluxes or sample material cross-sections
Cadmium Enriched Cd-108 > 60%	≤ 0.100	Metal CdO	powder, chips powder, chips	8.642 6.95	320.9 >1500	765 d 900-1000	Synthetic SiO2 ampule -6 mm o.d or less	Quantity limited ≤ 0.1 gram due to high cross-section	Product : Cd-109 Applications : Calibration Sources
Cobalt diluted (up to 10wt%) in Aluminum	≤ 1.5	Cobalt Metal or Oxide diluted in Al wire	Wire	2.7 g/cc (Al)	660 (Al)	2467 (Al)	Synthetic SiO2 ampule -6 mm o.d or less	None	Product : Co-60 Applications:: Gamma Source
Californium Source	≤ 197 μg	Oxide powder	Constructed SR-Cf-300 Series	NA	NA	NA		One Cf source with dummy/pushers Low Reactor Power (≤ 10% Full) to prevent reactor trip.	Product: None Used in system diagnostic and as a start-up source
Dysprosium Enriched Dy-164 > 97%	≤ 0.100	Dy_2O_3	Powder	7.81	2340		Synthetic SiO2 ampule -6 mm o.d or less	Quantity limited ≤ 0.1 gram due to high cross-section	Product: Dy/Ho-166 Applications : Cancer Radiotherapy
Hafnium Enriched Hf -180 >85%	≤ 0.400	Metal HfO_2	Powder,wire, foil Powder	13.31 9.68	2227 2758	4602 5400	Synthetic SiO2 ampule -6 mm o.d or less	None	Product :Hf-182 Applications : Nuclear Physics (Chronometer)

Table 6:Approved Materials for use in the Std. Finned Rabbits or Reduced Bore Finned Rabbit

- N3E020977A036- Rev 0 "HFIR Hydraulic Tube Irradiation Capsule Assembly and Details"
- N3E017045A012- Rev 0 "HFIR Hydraulic Tube Irradiation Capsule Assembly (NMG Type)"

Sample Material	Quantity grams	Chemical Form(s)	Physical Form(s)	Density g/cc	M.P. C	B.P. C	Encapsulation	Restrictions	Comments
Holmium Natural	≤ 0.500	Ho_2O_3	powder, chips	-8	2360	3900	Synthetic SiO2 ampule -6 mm o.d or less	None	Product : Ho-166,Ho-166m Applications: Cancer radiotherapy, gamma tomography of waste
Holmium Natural	≤ 1.5	Ho metal	Cylinder 3.97 mm ID * 6 mm OD	-2.7 (Al) 4.0-8.0 (Ho_2O_3)	660 (Al) 2360 (Ho_2O_3)	2467 (Al) 3900 (Ho_2O_3)	Al foil wrap per Sketch JLM-06272008-1	Al wrap and Helium fill gas required See C-HFIR-2008-028	Product : Ho-166,Ho-166m Applications: Cancer radiotherapy, gamma tomography of waste
Indium Enriched In-113 >85%	≤ 0.100	Metal Metal/Al Alloy In_2O_3	powder, chips powder, chips powder, chips	7.3 -2.7 7.18	156 -650 850	2080 -2467	Synthetic SiO2 ampoule -6 mm o.d or less	None	Product : In-114m Applications : Brachytherapy
Iridium Enriched Ir-193 > 97%	≤ 0.100	Metal	powder, chips	22.42	2410	4130	Synthetic SiO2 ampoule -6 mm o.d or less	None	Product : Pt-195m Applications : Brachytherapy
Iron : Enriched Fe-54 > 85%	≤2.5	Metal Fe_3O_4 :	Powder ,foil chips, wire Powder	7.86 5.18	1535 1594	2750	Synthetic SiO2 ampoule -6 mm o.d or less	None	Product : Fe-55 Applications : Ionization Sources
Lutetium Enriched Lu-176 > 85%	≤ 0.020	Lu_2O_3	Powder	9.42	2487		Synthetic SiO2 ampoule -6 mm o.d or less	Quantity limited ≤ 0.02 gram due to high cross-section	Product : Lu-177 Applications : Cancer Radiotherapy

Table 6:Approved Materials for use in the Std. Finned Rabbits or Reduced Bore Finned Rabbit

- N3E020977A036- Rev 0 "HFIR Hydraulic Tube Irradiation Capsule Assembly and Details"
- N3E017045A012- Rev 0 "HFIR Hydraulic Tube Irradiation Capsule Assembly (NMG Type)"

Sample Material	Quantity grams	Chemical Form(s)	Physical Form(s)	Density g/cc	M.P. C	B.P. C	Encapsulation	Restrictions	Comments
Molybdenum Natural or Enriched	≤1.0	Metal :	powder, chips	10.22	2623	4639	Synthetic SiO2 ampoule -6 mm o.d or less	None	Mo-99 : Medical
Neodymium Natural	≤0.100	Metal or Oxide	powder, chips	7.08	1021	3047	Synthetic SiO2 ampoule -6 mm o.d or less	None	
Neodymium Enriched Nd-146	≤0.100	Metal or Oxide	powder, chips	7.08	1021	3047	Synthetic SiO2 ampoule -6 mm o.d or less	None	
Osmium EnrichedOs-192 >95%	≤0. 500	Metal :	powder, chips	22.48	2700	>5300	Synthetic SiO2 ampoule -6 mm o.d or less	None	Product : Os-193 Applications : Nuclear Physics
Palladium Natural	≤ 2.5	Metal	Rod	11.40	1554	2970	Synthetic SiO2 ampoule -6 mm o.d or less	None	Product : Pd-103 Applications : Treatment of Prostate Cancer
Palladium Enriched Pd-102 >10%	≤ 2.5	Metal	Rod	11.40	1554	2970	Synthetic SiO2 ampoule -6 mm o.d or less	None	Product : Pd-103 Applications : Treatment of Prostate Cancer
Platinum Enriched Pt-194 > 95%	≤ 1	Metal	powder, chips, wire , foil	21.45	1772	3827	Synthetic SiO2 ampoule -6 mm o.d or less	None	Product : Pt-195m Applications : Auger electron therapy at cellular level
Platinum: Enriched Pt-195 > 95%	≤ 1	Metal	Powder , chips, wire , foil	21.45	1772	3827	Synthetic SiO2 ampoule -6 mm o.d or less	None	Product : Pt-195m Applications : Auger electron therapy at cellular level

Table 6:Approved Materials for use in the Std. Finned Rabbits or Reduced Bore Finned Rabbit

- N3E020977A036- Rev 0 "HFIR Hydraulic Tube Irradiation Capsule Assembly and Details"
- N3E017045A012- Rev 0 "HFIR Hydraulic Tube Irradiation Capsule Assembly (NMG Type)"

Sample Material	Quantity grams	Chemical Form(s)	Physical Form(s)	Density g/cc	M.P. C	B.P. C	Encapsulation	Restrictions	Comments
Radium: Ra-226	≤ 0.100	Metal or Oxide	Powder , chips, wire , foil	5	700	1140	Synthetic SiO2 ampoule -6 mm o.d or less	None	Product : Th-229, source for Ac-225/Bi213 Biomedical generator for Leukemia studies
Ruthenium: Natural or Enriched	≤ 0.100	Metal or Oxide	Powder , chips, wire , foil	12.41	2234	4150	Synthetic SiO2 ampoule -6 mm o.d or less	None	
Scandium diluted (up to 10 wt%) in MgO	≤ 1.5	Scandium Oxide diluted in MgO	Wire	3.58 (MgO)	2800 (MgO)	3600 (MgO)	Synthetic SiO2 ampoule -6 mm o.d or less	None	Product : Sc-46 Applications : Gamma Source
Tellurium Enriched Te-122 >60%	≤ 0.750	Metal	powder, chips	6.0	449	989	Synthetic SiO2 ampoule -6 mm o.d or less	None	Product : Te-123m Applications : Transmission Source for SPECT
Tellurium Enriched Te-123 >75%	≤ 0.750	Metal	powder, chips	6.0	449	989	Synthetic SiO2 ampoule -6 mm o.d or less	Quantity limited ≤ 0.75 gram due to high cross-section	Product : Te-123m Applications : Transmission Source for SPECT
Tin Enriched Sn-116 >95%	≤ 0.300	Metal: SnO_2	powder, chips powder, chips	5.75 6.95	232 1630	2270	Synthetic SiO2 ampoule -6 mm o.d or less	None	Product : Sn-117m Applications: treatment of bone pain from cancer metastasis
Tin Enriched Sn-117 > 95%	≤ 0.300	Metal SnO_2	powder, chips powder, chips	5.75 6.95	232 1630	2270	Synthetic SiO2 ampoule -6 mm o.d or less	None	Product : Sn-117m Applications: treatment of bone pain from cancer metastasis

Table 6:Approved Materials for use in the Std. Finned Rabbits or Reduced Bore Finned Rabbit

- N3E020977A036- Rev 0 "HFIR Hydraulic Tube Irradiation Capsule Assembly and Details"
- N3E017045A012- Rev 0 "HFIR Hydraulic Tube Irradiation Capsule Assembly (NMG Type)"

Sample Material	Quantity grams	Chemical Form(s)	Physical Form(s)	Density g/cc	M.P. C	B.P. C	Encapsulation	Restrictions	Comments
Tungsten Natural	≤ 4.833 (rings) ≤ 4.964 pellets	Metal WO_3	Powder, chips,wire, foil Powder	19.35 7.16	3410 1473	5660	See Sketch JLM02132007-001 (pellets)or JLM02142007-1 (rings)	Helium gas fill required – see C-HFIR-2007-022	Product : W/Re-188 Applications : Brachytherapy
Tungsten Enriched W-186 > 90%	≤ 4.833 (rings) ≤ 4.964 pellets	Metal WO_3	Powder , chips, wire , foil Powder	19.35 7.16	3410 1473	5660	See Sketch JLM02132007-001 (pellets)or JLM02142007-1 (rings)	Helium gas fill required – see C-HFIR-2007-022	Product : W/Re-188 Applications : Cancer radiotherapy , Endovascular irradiation for prevention of restenosis , Radiation synovectomy
Uranium Natural or Enriched	U-232 + U-233 + U-235 ≤ 1 mg Total U ≤ 100 mg	Metal UO_2 U_3O_8	Solid, Powder	19.1 10.9 8.3	1132 2827 1150	4131	Synthetic SiO2 ampoule -6 mm o.d or less	Sum of isotopic enrichment mass for U-232, -233, & -235 limited ≤ 1 mgram due to high fission cross-section	Product: Uranium isotopes Applications: cross section measurement and standards
Ytterbium Enriched Yb-168 <20%	≤ 0.100	Yb_2O_3	Powder	9.17	2227		Synthetic SiO2 ampoule -6 mm o.d or less	Quantity limited ≤ 0.1 gram due to high cross-section	Product : Yb-169 Applications : Brachytherapy
Ytterbium Enriched Yb-176 >85%	≤ 0.100	Yb_2O_3	Powder	9.17	2227		Synthetic SiO2 ampoule -6 mm o.d or less	None	Product : Lu-177 Applications : cancer therapy

Table 6:Approved Materials for use in the Std. Finned Rabbits or Reduced Bore Finned Rabbit

- N3E020977A036- Rev 0 "HFIR Hydraulic Tube Irradiation Capsule Assembly and Details"
- N3E017045A012- Rev 0 "HFIR Hydraulic Tube Irradiation Capsule Assembly (NMG Type)"

Sample Material	Quantity grams	Chemical Form(s)	Physical Form(s)	Density g/cc	M.P. C	B.P. C	Encapsulation	Restrictions	Comments
Xenon Enriched Xe-124 >95%	≤ 250 u grams	Elemental Xe Implanted on Silica	Elemental Xe Implanted on Silica				Synthetic SiO2 ampoule -6 mm o.d or less	None	Product : I-125 Applications: treatment of prostate cancer